# Operator's Manual

# SeaBattery® Power Module

A Reliable Subsea Pressure-Compensated Submersible Battery


**⚠ WARNING!**

**Read this Operator's Manual carefully before using this tool. Failure to understand and follow the contents of this manual may result in electrical shock, fire, and/or serious personal injury.**

# Specification Overview

| | SB-6/210 | SB-12/80 | SB-24/40 | SB-48/18 |
|---|---|---|---|---|
| **Environmental Specifications** | | | | |
| **Depth** | 11,000 m | | | |
| **Charging Temperature Range** | -15º C to 50º C<br>[5º F to 122º F] | | | |
| **Operating Temperature Range** | -20º C to 60º C<br>[-4º F to 140º F] | | | |
| **Recommended Storage Temperature Range[2]** | 0º C to 30º C<br>[32º F to 86º F] | | | |
| **Electrical Specifications** | | | | |
| **Standard Configurations[3]** | 6 volt, 210 amp hour | 12 volt, 80 amp hour | 24 volt, 40 amp hour | 48 volt, 18 amp hour |
| **Max Discharge Rate[4 5]** | IL4FS: 16 Amps<br>SEACON AWO-3 w/G: 100 Amps | | | |
| **Mechanical Specifications** | | | | |
| **Length** | 457.2 mm [18.00 in.] | | | |
| **Width** | 304.8 mm [12.0 in.] | | | |
| **Height** | 323.9 mm [12.75 in.] | | | |
| **Weight in Air[1]** | 48.2 kg [106 lbs.] +/- 2% | | 49.0 kg [108 lbs.] +/- 2% | |
| **Weight in Water[1]** | 18.2 kg [40 lbs.] | | 19.1 kg [42 lbs.] | |
| **Case** | Molded Polyethylene | | | |
| **Diaphragm** | Molded Polyurethane | | | |
| **Compensating Fluid** | Inert oil | | | |
| **Connector** | | | | |
| **Connector** | Right angle diaphragm penetrator on 2-meter cable terminated with<br>Standard: IL4FS connector + Female Locking Sleeve<br>Optional (High Current): SEACON AWO-3FS w/G + Female Locking Sleeve | | | |
| **Chargers** | | | | |
| **Charger** | N/A | SB-CHG-SW/12 | SB-CHG-SW/24 | SB-CHG-120/48<br>SB-CHG-240/48 |

## Standard Connector

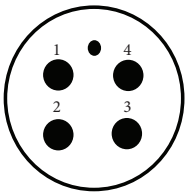


### IL4FS

Pin 1 = Ground
Pin 2 = + Volts
Pin 3 = + Volts
Pin 4 = Ground

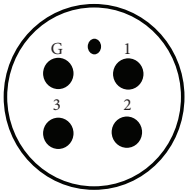


### AWO-3 w/G-FS

Pin 1 = Ground
Pin 2 = + Volts
Pin 3 = + Volts
Pin G = Ground

*Other connectors are available upon request. NRE fee may apply.

## Dimensions & Notes

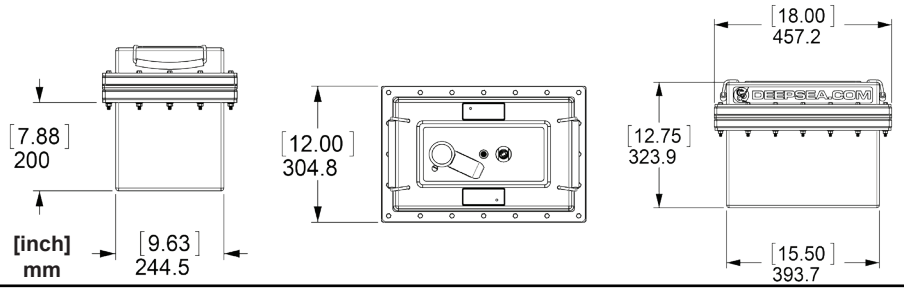


[1] High Current configurations are nominally 1.2 lbs heavier than standard versions.
[2] Self discharge rate varies with ambient temperature. At room temperature (20°C (68°F)) it is about 3% per month, and increases or decreases directly proportional to temperature.
[3] Stated amp hour ratings (Ah) are manufacturer ratings for the lead-acid batteries contained within the SeaBattery Power Module. Due to the modifications required to pressure compensate the lead-acid batteries, DeepSea Power & Light manufactures and recommends the use of special chargers. These custom chargers utilize a lower charge voltage than a typical automotive style charger which serves to reduce gas generation and yields improved service life. As a result of the lower charge voltage, capacity (Ah) is reduced. When designing a system, DeepSea Power & Light recommends a conservative approach, as actual battery capacity depends on many factors including ambient temperature, rate of discharge, number of cycles, and age. For critical applications, it is the responsibility of the customer to evaluate the suitability of the product for their application, as well as the required capacity and length of service life.
[4] Standard penetrators are limited by to 16 Amps by the gauge of cable. High Current configurations are capable of a Max Discharge Rate of 100 Amps (50 Amps per contact).
[5] For maximum battery life, do not discharge battery below 75% of rated voltage.

** Specifications subject to change without notice.*

# Table of Contents

# Safety Symbol

**In this operator's manual and on the product, safety symbols are used to communicate important safety information. This section is provided to improve understanding of these symbols.**

This is the safety alert symbol. It is used to alert you to potential personal injury hazards. Obey all safety messages that follow this symbol to avoid possible injury or death.

DANGER **DANGER** indicates a hazardous situation which, if not avoided, could result in death or serious injury.

WARNING **WARNING** indicates a hazardous situation which, if not avoided, could result in damage to the product or bodily harm.

CAUTION **CAUTION** indicates a hazardous situation which, if not avoided, could result in minor or moderate injury.

NOTICE **NOTICE** indicates information that relates to the protection of property.

This symbol means read the operator's manual carefully before using the equipment. The operator's manual contains important information on the safe and proper operation of the equipment.

This symbol means always wear safety glasses with side shields or goggles when handling or using this equipment to reduce the risk of eye injury.

This symbol indicates the risk of electrical shock.

# General Description

Each molded orange polyethylene box contains multiple batteries in one of four configurations:

1. Two 12V-40AH batteries connected in parallel to provide 12V-80Ah (SB12/80).
2. Two 12V-40AH batteries connected in series to provide 24V-40Ah (SB24/40);
3. Four 12v-18Ah batteries connected in series to provide 48V-18Ah (SB48/18);
4. One 6V-210Ah battery to provide 6V-210Ah (SB06/210).

All batteries are maintenance-free rechargeable lead-acid cells which use Absorbent Glass Matt electrolyte. The non-liquid "suspended electrolyte" permits the batteries to be operated in any orientation without spillage or loss of capacity, and prevents electrolyte stratification which greatly reduces capacity. The battery boxes are filled with Drakeol 35 high purity white mineral oil to provide isolation from seawater and pressure compensation.

The batteries have low self-discharge characteristics, particuarly at cold depths. The AGM technology produces a minimal gas buildup during normal charge and discharge cycles, eliminating the need for potentially problematic mechanical venting systems. Gas is manually vented through a valve molded into the diaphragm. The flexible urethane diaphragm is transparent, allowing the battery and interior wiring to be visually inspected without disassembly.

**NOTICE**

1. A small gas bubble 2-3 in. in diameter under the diaphragm valve is normal. Manual venting is recommended when the bubble diameter exceeds about 15 cm. [6 in.]. (See "Venting," Page 5.)
2. To ensure long life at rated capacity:
   a. DO NOT overcharge. DO NOT use an automotive type battery charger.
   b. Store in charged condition at reduced temperature (-40° to 50° F), if possible. A float charger is recommended.
   c. For maximum battery life, do not discharge battery below 75% of rated voltage.
   d. Your SeaBattery Power Module should always be charged in an upright position to allow for gas to migrate out of the battery cells.
3. The published capacities of our SeaBattery Power Module are based on the published capacity of the basic battery cells when used in air in a standalone configuration. It is recommended that users de-rate those capacities to get closer to the actual capacity of a SeaBattery Power Module when used in the field. The useful capacity of a battery varies widely based on the discharge current, the temperature

during discharge, the ambient pressure, the age of the battery and many other variable factors. We recommend that testing be performed to determine the appropriate de-rating factor to apply to the published capacity of your battery when used in your specific application.

**⚠DANGER**

**These batteries can deliver very high currents if shorted.** Exposed male connector pins with applied power should be handled with extreme care; they can be easily shorted against any metal surface. If a short circuit persists for more than about a second, connectors and cabling may be destroyed and fire could result. ALWAYS verify polarity. Many devices can be damaged by reverse polarity. (See wiring diagrams in Appendix A.)

# Charging

The battery should always be fully charged before use, and should be stored in a fully charged state (See "Battery Storage," page 7).

The battery cells are of starved electrolyte construction, and produce very little, if any, gas while charging. However, once the battery is fully charged, a cell will start to produce gas if it continues to be charged. IT IS EXTREMELY IMPORTANT NOT TO OVERCHARGE THE BATTERY. The evolution of gas that results from overcharging will slowly reduce the capacity of the cells by drying out the electrolyte. In extreme cases, the diaphragm can be damaged by the pressure load caused by the trapped gas bubble.

To ensure many recharging cycles over the life of the cells, it is preferable to slightly undercharge them on each cycle. This is because one cell will usually achieve full charge before the others and a stream of gas bubbles will rise from that cell. If the battery is charged beyond this point, there may be some slow bubble formation after it is disconnected from the charger. This gas formation should stop within about an hour.

**VENTING:** Excess gas that accumulates can be vented easily by slowly and carefully loosening the chromed valve cap and bleeding the gas. **DO NOT remove cap.** Be careful to minimize loss of compensating oil. It is under slight positive pressure caused by the stretch of the urethane diaphragm.

Batteries should always be charged in an upright position. Charging in an inverted position may result in gas being trapped inside the cells. Keep a close watch on batteries during their first charge cycle after shipment or storage, or after a significant temperature change, by watching for bubbles flowing from the cells.

Do not exceed .25 x $C_a$ amps charging current, where Ca is the amperage capacity of your SeaBattery Power Module. For example, to charge a 12V-80 amp hr battery, the maximum charging current should be less than .25 x 80 = 20 amps. Charge until a single cell starts venting and measure the battery voltage at that point. This is the reference battery voltage value for the fully charged state. This value will decrease over the life of the battery, and is also a function of temperature and of time after charge (voltage settling will occur shortly after disconnecting from charge).

***NOTICE***

The SeaBattery Power Module should be charged with a constant voltage, current limiting charger

(See "Chargers" next section.).

Do not use an automotive battery charger. This type of charger will overcharge the battery.

**⚠WARNING**

Severe overcharging can result in formation of a large amount of explosive gas which may result in mechanical rupture of the diaphragm and/or fire and/or explosion.

# Chargers

A bench power source with current limited to .25$C_a$ as calculated above can be used.

Specially designed battery chargers are available from DeepSea Power & Light for each SeaBattery Power Module configuration. Contact DeepSea Power & Light for further battery charger information. The following instructions apply to these chargers.

Once powered up and connected to the battery, the two red charger lights will turn on. The lower light indicates "power on" and "low rate" while the upper light indicates "high rate". When the battery reaches full charge the "high rate" light will go out. The "high rate" set point voltage will vary as a function of temperature and battery condition. It may have to be re-tuned as the battery ages, due to a natural decrease in battery capacity. Charging time depends on battery and charger capacity and on the initial state of charge.

If the charger is well-tuned, the battery should not produce gas during the charging cycle. The diaphragm valve should always remain closed while charging. The battery should be checked for gas production, especially toward the end of the charging cycle. If there is a stream

of bubbles rising from one or more of the cells and the charger “high rate” light is still on, then the battery is being overcharged and the charger is incorrectly tuned. Contact DeepSea Power & Light for charger tuning information.

Batteries may be charged either inside or outdoors. If a battery is being charged outdoors great care must be taken to protect the charger from rain or sea spray as the chargers are not weatherproof. Prolonged unprotected exposure to salt spray may damage the charger electronics. A large, heavy plastic bag can be used to cover and protect the charger.

# Standard Connector

A right angle diaphragm penetrator is installed on the SeaBattery Power Module diaphragm, and is molded to a 16 gage 4-conductor underwater power cable (SO 16/4 ) terminated with an IL4FS female contact connector. The connector polarity is shown below.

FEMALE CONNECTOR PINOUT DIAGRAM (for all standard SeaBattery Power Module configurations)

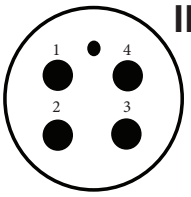


**IL4FS**

1. Ground
2. +Volts
3. +Volts
4. Ground

Note: Pinout for custom configurations may differ from image shown.

### High Current Connector

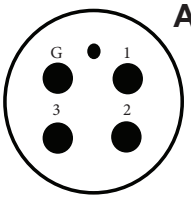


**AWO3 w/G-FS**

1. Ground
2. +Volts
3. +Volts
G. Ground

Note: Pinout for custom configurations may differ from image shown.

*All of the SeaBattery Power Module variations are capable of being equipped with a High Current Connector. Please contact DeepSea Power & Light for additional information.

# Discharging

For optimal results, the SeaBattery Power Module should not be overly discharged. For maximum life of your SeaBattery Power Module, do not reduce the voltage below the minimum values shown (25% depth of discharge).

| Nominal Voltage | Minimal Voltage |
|---|---|
| 48 | 36 |
| 24 | 18 |
| 12 | 9 |
| 6 | 4.5 |

Complete discharge is not advised, but batteries can usually be recovered by using a special charging procedure. If the battery is completely discharged and will not accept a charge, try initializing the charge with a higher voltage to induce current flow. When current is flowing, reduce the voltage. Refer to the “Recharge Methods” technical notes located in Appendix B.

The SeaBattery Power Module may produce a small amount of gas in the discharge cycle, especially during rapid discharge. Before use, purge any significant bubbles from the SeaBattery Power Module case. A small amount of gas trapped under the diaphragm will not cause a problem; it will go into solution under pressure, and the flexibility of the diaphragm allows for limited expansion and contraction of volume. When the SeaBattery Power Module is brought to the surface, the depressurization will cause the compensating oil to foam. This is normal, and will form into a single bubble within about an hour, after which it should be purged. (See “Venting” on page 5.)

**⚠ DANGER**

The SeaBattery Power Module is capable of discharging very high currents and must not be shorted. Cables and connectors can quickly be destroyed by the high current resulting from a short circuit.

# Inspection

OIL FILL: The diaphragm should be filled so that the top of the urethane diaphragm is approximately 1-3/8”– 1-1/2” below the top of the box. A small air bubble of approximately 4-6” Dia is OK. If more oil is required, a white mineral oil is best. However, in an emergency, almost any type of oil that will not damage rubber or solidify at low temperatures are best, such as mineral oil (high viscosity is best), white oils, silicon oil, and select cooking oils.

WATER INSIDE CASE: Unless completely flooded above the top of the battery, some water inside the case should not cause battery failure. A non-hardening marine grade gasket lubricant (e.g. AquaShield) is used between the case and the diaphragm to help the seals properly seat.

BOLT TIGHTNESS: It is important that the bolts that secure the top to the case are tightened to the correct torque specifications.

The bolts around the perimeter of the box may loosen over time. Check the torques periodically. Tighten the center bolts on each side until the edge of the diaphragm begins to bulge at that point. Tighten the bolts down less at the corners of the box, thus maintaining a

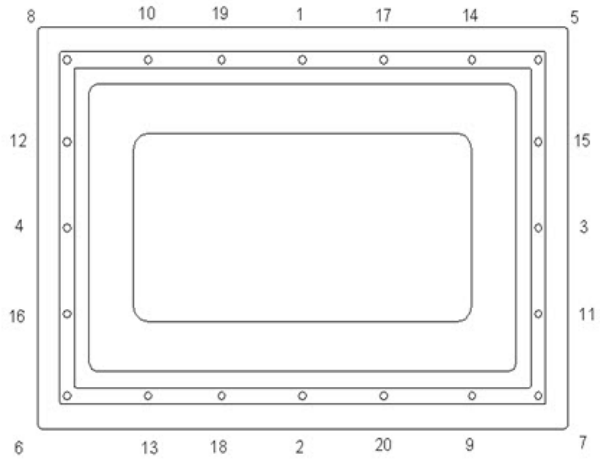


uniform bulge of approximately 2-3 mm between the top and the case. The factory torque instructions are:

1. Torque the bolts evenly, starting with the middle bolts on the sides and ends in the pattern shown below. Torque all bolts initially to 50 in.-lb [5.7 N.m.] using the sequence shown below.
2. Change the torque setting to 100 in.-lb [11.3 N.m] and re-torque all bolts, except the four corner bolts, in the same sequence. The corner bolts are left at 50-in.-lb.
3. Check to insure that no AquaShield has squeezed into the battery area.

If the bolts are too loose, the box will slowly leak oil. Over-tightening will cause deformation of the diaphragm; extreme over-tightening can cause the diaphragm to tear.

Inspect the SeaBattery Power Module after the first deployment, or after submersion to a significant depth. Check for water leakage by inverting the box and looking for water bubbles. Water can be drained from the case when in this position through the vent valve. After rough usage, always check for damage to cable and connectors, loose bolts, and for debris, such as rocks, trapped between the case lid and the diaphragm.

# Mounting

The SeaBattery Power Module case is durable, but heavy, and must be well secured. Often, a simple frame of angle stock around the base with a ratchet cargo strap over the top is sufficient. Ensure rectangular opening on lid is completely unobstructed for free movement and distension of diaphragm. For a more robust tie down in extremely rough uses, such as a towed systems that might "crash" into the bottom, designers can consider a top frame of angle stock with tie rod pull downs.

**⚠WARNING**

DO NOT mount the SeaBattery Power Module so the clamp flange is bearing any weight. The weight of the battery may cause cold flow deformation of the plastic flange which can result in leakage.

Vibration resistance: The SeaBattery Power Module is inherently resistant to vibration. However, some SeaBattery Power Module owners take the added precaution of placing a solid 3/8" thick 80 Shore neoprene sheet under the SeaBattery Power Module case as a vibration and shock cushion.

# Battery Storage

Recommended Storage Temperature: -40°C [-40°F] to 10°C [50°F].

Storage at a low ambient temperature reduces the self-discharge rate. Higher temperatures will cause the battery to self-discharge more rapidly and produce excess gas, which should be vented.

***NOTICE***

The SeaBattery Power Module should be recharged at least once every 6 months while in storage at room temperature. More frequent recharging is required when stored at higher temperatures. A float charger is recommended.

**⚠WARNING**

When completely discharged, the electrolyte is reduced nearly to water. Avoid freezing conditions, as the electrolyte can freeze and expand, damaging the plates in the SeaBattery Power Module cells.

After the last deployment or battery use, fully recharge the SeaBattery Power Module before storing. Although the battery can be used in any position, it should be stored upright. The battery case does not need to be disassembled for storage.

Check the battery periodically for excess gas production, and release any gas bubble. During extended storage at elevated temperatures, gas production may be more significant, so more frequent checking may be

necessary. Any oil lost can be replaced prior to actual use.

Long term exposure to sunlight (UV radiation) can eventually cause some degradation in the mechanical properties of the urethane diaphragm. Avoid storing the SeaBattery Power Module in full sunlight for extended periods. Cover the battery for periods of exposure of longer than a week or two.

The plastic case is made of polyethylene which is impervious to most oils and solvents. The connectors are molded nitrite or neoprene; contact with damaging oils or solvents (e.g. diesel oil or organic solvents) should be avoided. Similarly, do not use any organic solvent on the urethane diaphragm.

# Life Expectancy

The SeaBattery Power Module life expectancy is approximately three years under normal use. Intermittent use combined with cold storage can increase battery life, while abuse, including deep discharging, can significantly shorten life expectancy. Contact DeepSea Power & Light for applications that require continuous use and in-situ recharging.

# Shipping

The SeaBattery Power Module is classified as a dry cell type battery by the DOT and can be shipped by air freight if needed. Ground shipment is more cost effective, but takes more time.

# Customer Modifications

It is recommended that electrical penetrations be made through the urethane diaphragm, although successful penetrations have been made through the case. Holes cut through the diaphragm should be cut with a Cork and Rubber punch tool (circular knife), such as McMaster-Carr p/n 6122A12, rather than drilled. Drilling causes ragged hole edges which have a tendency to initiate tearing. Holes must be cut significantly undersize to maintain a tight seal during diaphragm stretch. For example, a ½" Dia hole is cut to fit a 3/4" Dia threaded wire feed through.

Customer modifications or field battery replacement voids the SeaBattery Power Module warranty.

# Warranty Information

### Limited Warranty

Seller warrants that the goods (except internal electronic components) sold under this contract will be free from defect in material and workmanship for a period of one year from the date of shipment from the factory, if they have been properly used. Internal electronic components are warranted for 90 days from the date of shipment from the factory, if they have been properly used. This warranty will be limited to the repair or replacement of parts and the necessary labor and services required to repair the goods. IT IS EXPRESSLY AGREED THAT THIS WARRANTY WILL BE IN LIEU OF ALL WARRANTIES OF FITNESS AND IN LIEU OF THE WARRANTY OF MERCHANTABILITY. This warranty is the exclusive and only warranty to pass with the goods under this contract. No agent, employee, or representative of the Seller has any authority to bind Seller to any information, representation, or warranty concerning the goods sold under this contract, and unless an affirmation, representation, or warranty made by an agent, employee, or representative is specifically included within this contract, it will not be enforceable by Buyer. If notice of defect is given to DeepSea Power & Light LLC within such 90 day or one-year warranty period, the sole obligation of DeepSea Power & Light LLC shall be to furnish new or repaired parts free of charge in exchange for parts which have been proved defective and does not include any other costs such as the cost of removal of the defective part, installation, labor, or consequential damages of any kind, the exclusive remedy being to require DeepSea Power & Light LLC to furnish such new parts. Under no circumstances shall the Buyer be entitled to recover any incidental damages as that term is defined in Commercial Code §2715.

# Appendix A

Wiring Diagrams for SeaBattery Power Module, 6V, 12V, 24V, 48V

## SeaBattery Power Module 6/210 Wiring and Connector Pinout

Female Connector Pinout Diagram (for 6V SeaBattery)

IL4FS

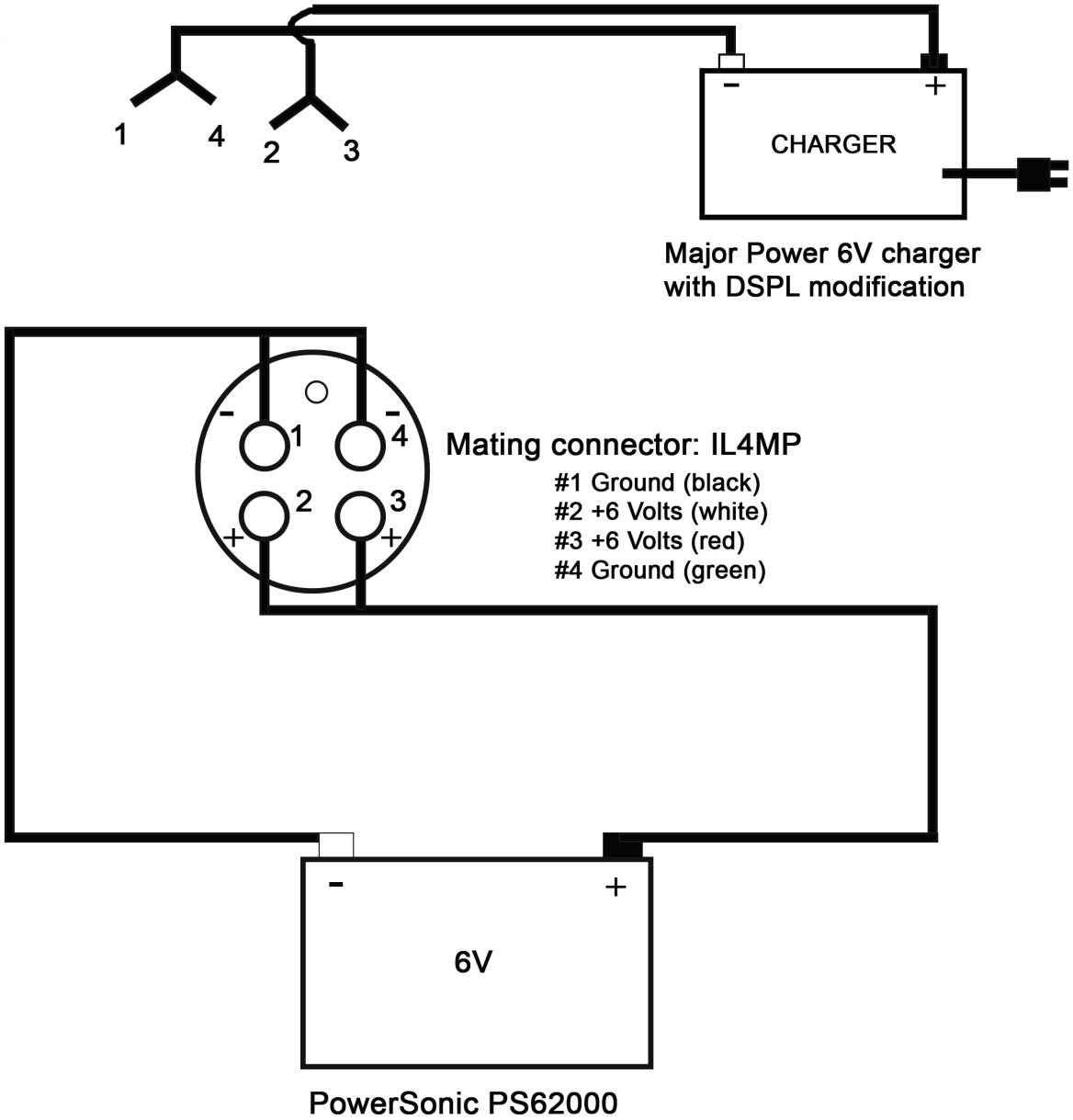


Note: Pinout for custom configurations may differ from image shown.

## SeaBattery Power Module 12/80 Wiring and Connector Pinout

Female Connector Pinout Diagram (for 12V SeaBattery)

IL4FS

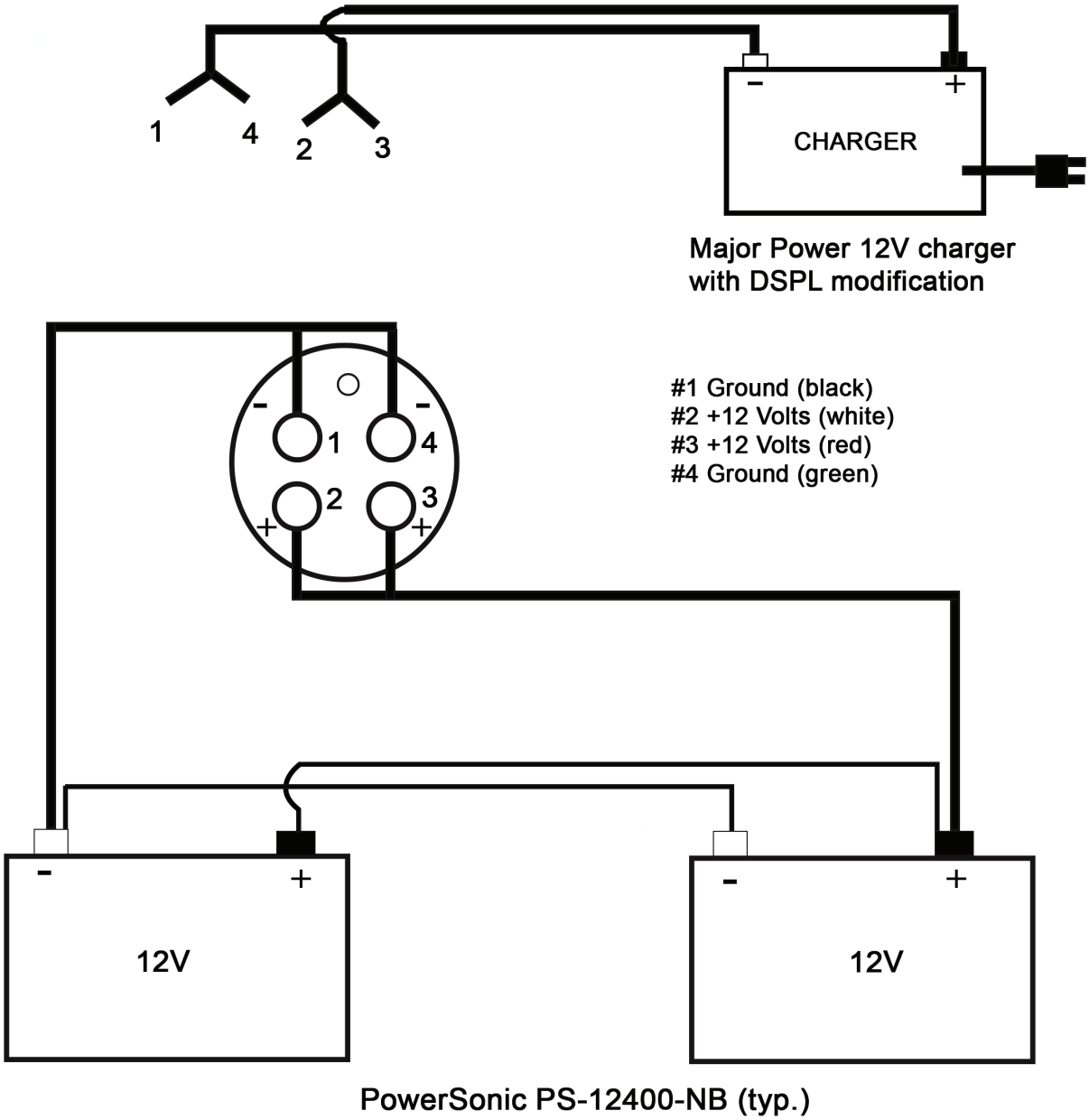


Note: Pinout for custom configurations may differ from image shown.

## SeaBattery Power Module 24/40 Wiring and Connector Pinout

Female Connector Pinout Diagram (for 24V SeaBattery)

IL4FS

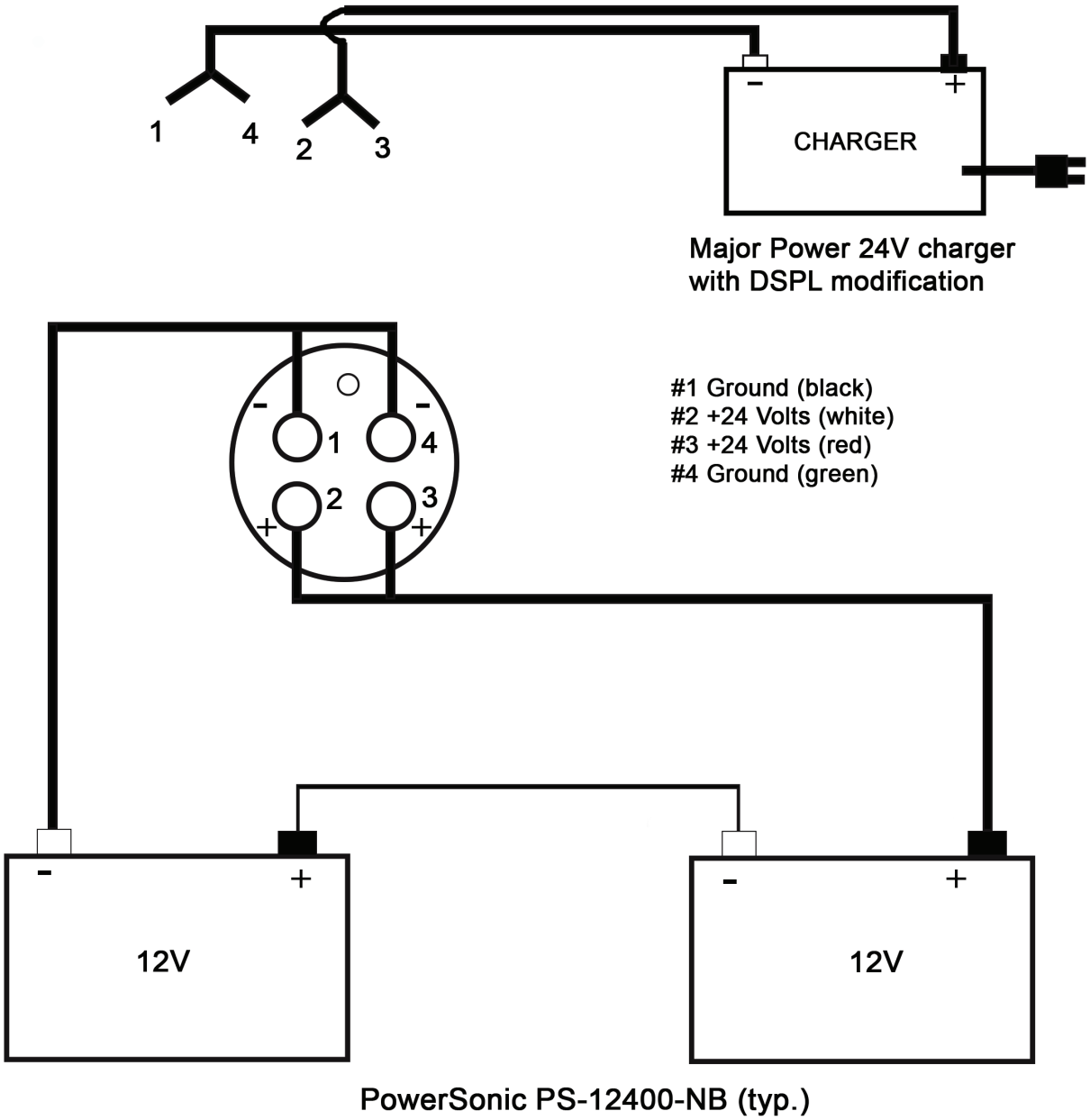


Note: Pinout for custom configurations may differ from image shown.

## SeaBattery Power Module 48/18 Wiring and Connector Pinout

Female Connector Pinout Diagram (for 48V SeaBattery)

IL4FS

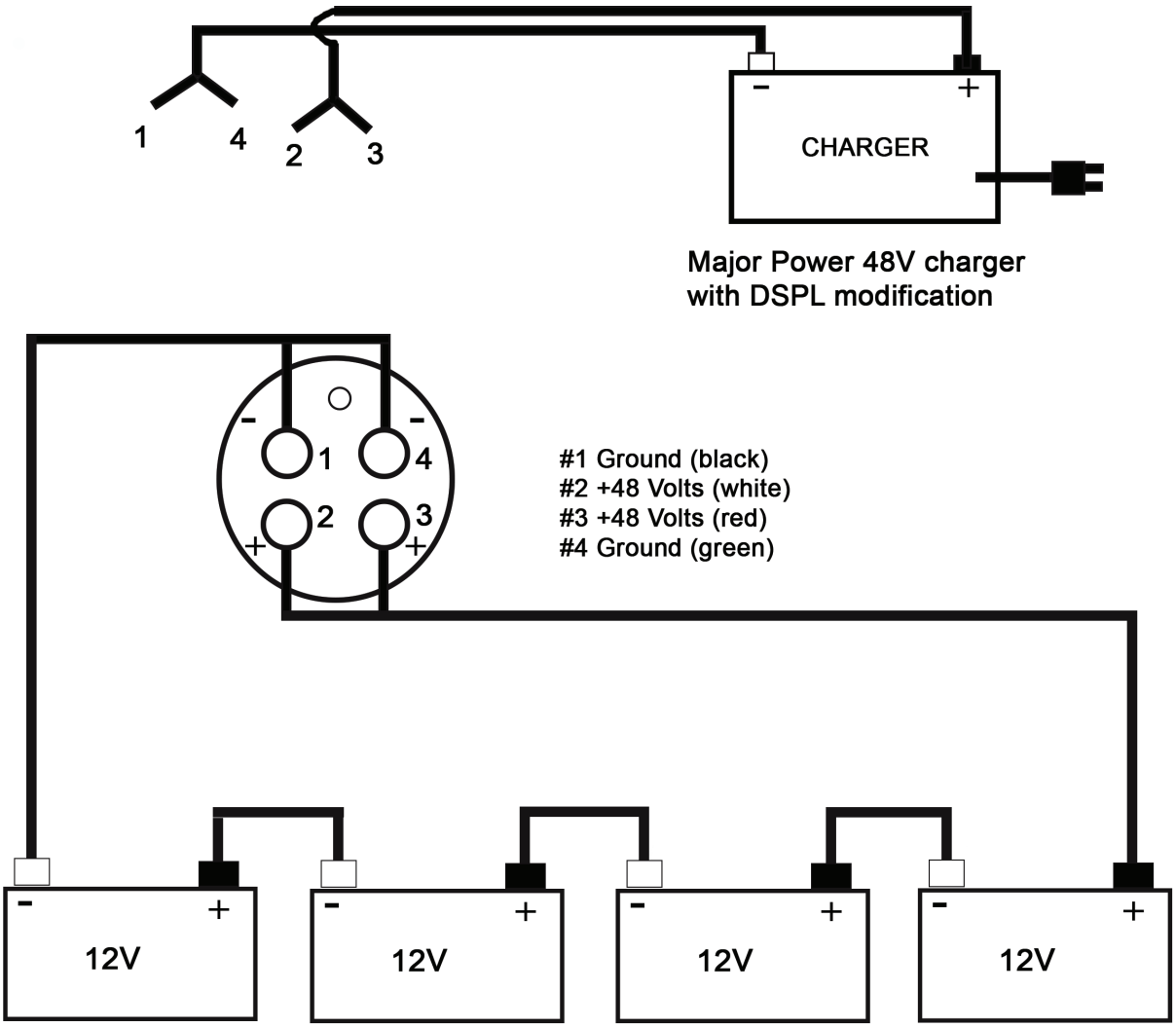


Note: Pinout for custom configurations may differ from image shown.

# Appendix B

PowerSonic Maintenance-Free Rechargeable Battery Application Manual

# Sealed Lead-Acid Batteries Technical Manual

POWER-SONIC

## Table of Contents

# Features of Power-Sonic Sealed Lead Acid Batteries

## Sealed/Maintenance–Free
The valve regulated spill proof construction allows trouble-free safe operation in any position. There is no need to add electrolyte, as gases generated during the charge phase are recombined in a unique “oxygen cycle”.

Power-Sonic sealed lead acid batteries can be operated in virtually any orientation without the loss of capacity or electrolyte leakage. However, upside down operation is not recommended.

## Long Shelf Life
A low self-discharge rate, up to approximately 3% per month, may allow storage of fully charged batteries for up to a year, depending on storage temperatures, before charging becomes critical. *However, we strongly recommend that all batteries should be recharged within six months of receipt as it will enhance their long term life.*

Please refer to this Technical Manual and individual battery specification sheets for more details.

## Design Flexibility
Same model batteries may be used in series and/or parallel to obtain choice of voltage and capacity. The same battery may be used in either cyclic or standby applications. Over 80 models available to choose from.

## Deep Discharge Recovery
Special separators, advanced plate composition and a carefully balanced electrolyte system ensure that the battery has the ability to recover from excessively deep discharge.

## Economical
The high watt-hour per dollar value is made possible by the materials used in a sealed lead-acid battery; they are readily available and low in cost.

## Easy Handling
No special handling precautions or shipping containers, surface or air, are required due to the leak-proof construction. Please refer to the declaration of non restricted status for D.O.T. and I.A.T.A. as listed in the Literature section of our website: www.power-sonic.com.

## Compact
Power-Sonic batteries utilize state of the art design, high grade materials, and a carefully controlled plate-making process to provide excellent output per cell. The high energy density results in superior power/volume and power/weight ratios.

## Low Pressure Valve Regulators
All batteries feature a series of low pressure one-way relief valves. These valves safely release any excessive accumulation of gas inside the battery and then reseal.

## High Discharge Rate
Low internal resistance allows discharge currents of up to ten times the rated capacity of the battery. Relatively small batteries may thus be specified in applications requiring high peak currents.

## Wide Operating Temperature Range
Power-Sonic batteries may be discharged over a temperature range of -40°C to +60°C (-40°F to +140°F) and charged at temperatures ranging from -20°C to +50°C (-4°F to +122°F).

## Rugged Construction
The high impact resistant battery case is made of non-conductive ABS plastic. The case materials impart great resistance to shock, vibration, chemicals and heat. Flame Retardant (FR) battery cases and lids are available where the end application dictates.

## Long Service Life
PS/PSH and PSG Series: Have a design life of up to five years in standby applications. In cyclical applications up to 1,000 charge/discharge cycles can be expected depending on average depth of discharge.

PG Series: Have a design life of up to 10 years in float applications.

Please consult this Technical Manual and product specifications to become aware of the many factors that effect product life.

# Battery Construction

### Terminals
Depending on the model, batteries come either with AMP Faston type terminals made of tin plated brass, post type terminals of the same composition with threaded nut and bolt hardware, or heavy duty flag terminals made of lead alloy.

A special epoxy is used as sealing material surrounding the terminals.

### Relief valve
In case of excessive gas pressure build-up inside the battery, the relief valve will open and relieve the pressure. The one-way valve not only ensures that no air gets into the battery where the oxygen would react with the plates causing internal discharge, but also represents an important safety device in the event of excessive overcharge.

Vent release pressure is between 2-6 psi; the seal ring material is neoprene rubber.

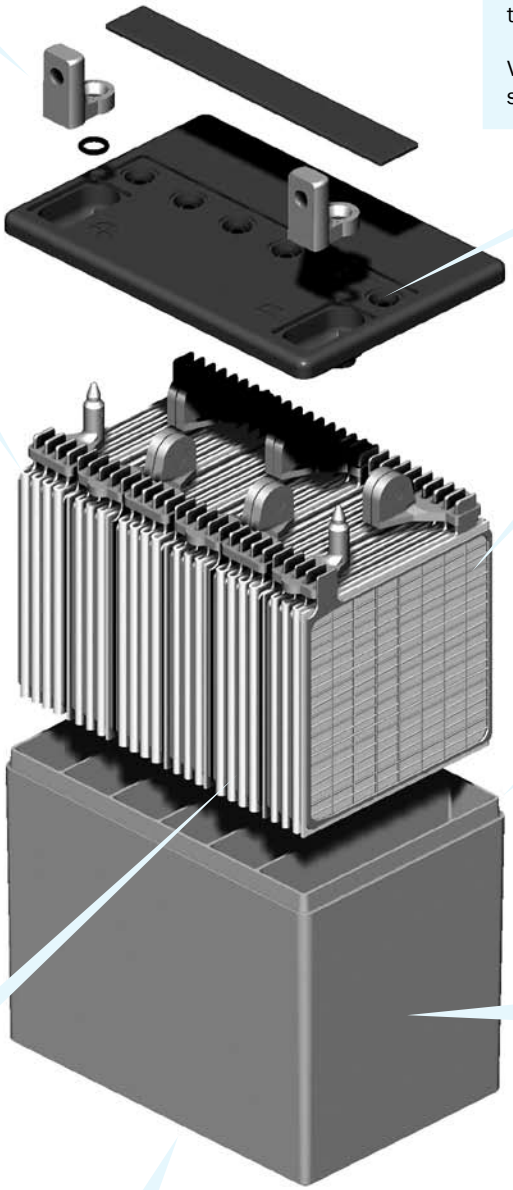

### Plates (electrodes)
Power-Sonic utilizes the latest technology and equipment to cast grids from a lead-calcium alloy free of antimony. The small amount of calcium and tin in the grid alloy imparts strength to the plate and guarantees durability even in extensive cycle service. Lead dioxide paste is added to the grid to form the electrically active material.

In the charged state, the negative plate paste is pure lead and that of the positive lead dioxide. Both of these are in a porous or spongy form to optimize surface area and thereby maximize capacity. The heavy duty lead calcium alloy grids provide an extra margin of performance and life in both cyclic and float applications and give unparalleled recovery from deep discharge.

### Separators
Power-Sonic separators are made of non-woven glass fiber cloth with high heat and oxidation resistance. The material further offers superior electrolyte absorption and retaining ability, as well as excellent ion conductivity.

### Case Sealing
Depending on the model the case sealing is ultrasonic, epoxy or heat seal.

### Container
Case and lid material is ABS, high impact, resin with high resistance to chemicals and flammability. Case and cover are made of non-conductive ABS plastic to UL94-HB or UL94 V-O.

This case has molded-in dividers for each 2 volt cell.

### Electrolyte
Immobilized dilute sulfuric acid: $H_2SO_4$.

### Leakproof Design & Operational Safety
The leak proof construction of Power-Sonic batteries has ensured that our batteries have been approved for shipment by air, both by D.O.T. and I.A.T.A. Copies of these approvals are available on our website: www.power-sonic.com.

U.L's component recognition program for emergency lighting and power batteries lists Power-Sonic under file number MH20845

## Theory of Operation

The basic electrochemical reaction equation in a lead acid battery can be written as:

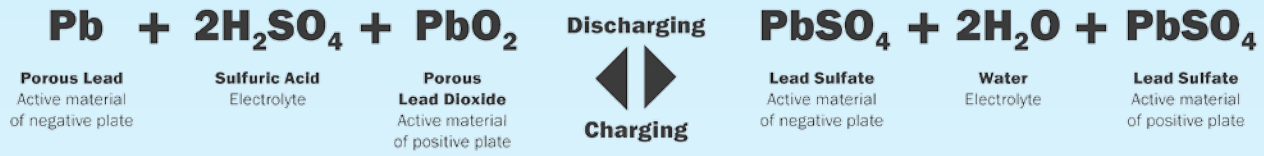


### Discharge

During the discharge portion of the reaction, lead dioxide ($PbO_2$) is converted into lead sulfate ($PbSO_4$) at the positive plate. At the negative plate sponge lead (Pb) is converted to lead sulfate ($PbSO_4$). This causes the sulfuric acid ($2H_2SO_4$) in the electrolyte to be consumed.

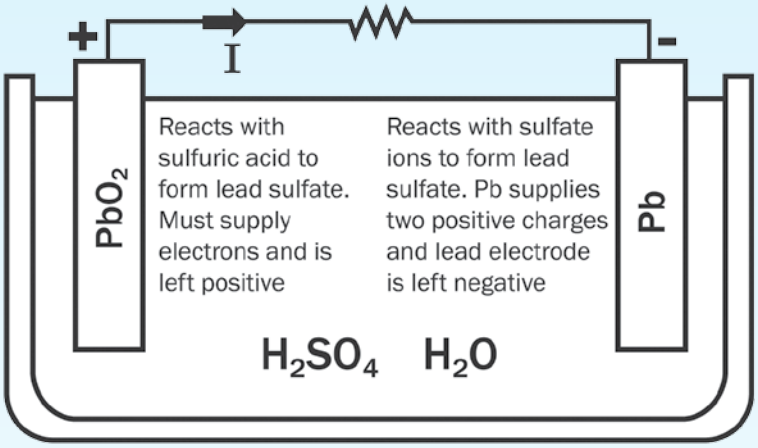


***Figure 1: Chemical reaction when a battery is being discharged***

### Charge

During the recharge phase of the reaction, the cycle is reversed. The lead sulfate ($PbSO_4$) and water are electrochemically converted to lead (Pb), lead dioxide ($PbO_4$) and sulfuric acid ($2H_2SO_4$) by an external electrical charging source.

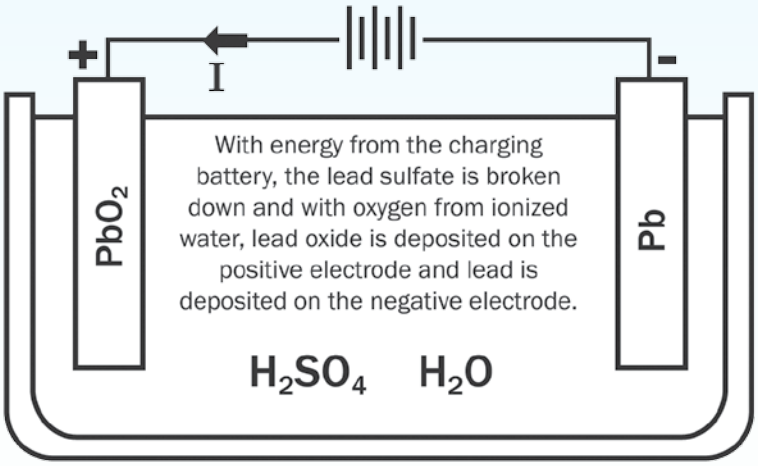


***Figure 2: Chemical reaction when a battery is being charged***

# Theory of Operation

## Oxygen Recombination

To produce a truly maintenance-free battery, it is necessary that gases generated during overcharge are recombined in a so-called "oxygen cycle". Should oxygen and hydrogen escape, a gradual drying out would occur, eventually affecting capacity and battery life.

During charge, oxygen is generated at the positive and reacts with and partially discharges the sponge lead of the negative. As charging continues the oxygen recombines with the hydrogen being generated by the negative, forming water. The water content of the electrolyte thus remains unchanged unless the charging rate is too high.

In case of rapid generation of oxygen exceeding the absorbing capacity of the negative plate, the pressure relief valve will open to release excessive gas.

## Deep Discharge

Power-Sonic batteries are protected against cell shorting by the addition of a buffering agent that ensures the presence of acid ions even in a fully discharged state.

Power-Sonic defines "deep discharge" as one that allows the battery voltage under load to go below the cut-off (or "final") voltage of a full discharge. The recommended cutoff voltage varies with the discharge rate. Table 1 shows the final discharge voltages per cell.

It is important to note that deep discharging a battery at high rates for short periods is not nearly as severe as discharging a battery at low rates for long periods of time. To clarify, let's analyze two examples:

- **Battery A** – Discharged at the 1C rate to zero volts.
  "C" for a 4 AH battery, for example, is 4 amps. Full discharge is reached after about 30 minutes when the battery voltage drops to 1.5V/cell. At this point, only 50% of rated capacity has been discharged (1 C amps x 0.5 hrs = 0.5C Amp. Hrs). Continuing the discharge to zero volts will bring the total amount of discharged ampere-hours to approximately 75% because the rapidly declining voltage quickly reduces current flow to a trickle. The battery will recover easily from this type of deep discharge.

- **Battery B** – Discharged at the 0.01 C rate to zero volts.
  0.0IC for a 4 AH battery is 40mA. Full discharge is reached after 100+ hours when the terminal voltage drops to 1.75 V/cell. At this point, the battery has already delivered 100% of its rated capacity (0.01 x 100 hrs = 1C Amp. Hrs.). Continuing the discharge to zero volts will keep the battery under load for a further period of time, squeezing out every bit of stored energy.

  This type of "deep" discharge is severe and is likely to damage the battery. The sooner a severely discharged battery is recharged, the better its chances to fully recover.

| Discharge Current | Final Discharge Voltage Per Cell |
|---|---|
| 0.1C or below, or intermittent discharge | 1.75 |
| 0.17C or current close to it | 1.75 |
| 0.6C or current close to it | 1.70 |
| From 1C to 2C or current close to it | 1.50 |
| 3C or current close to it and above | 1.37 |

***Table 1: Final discharge voltage per cell***

## Capacity

The capacity of a battery is the total amount of electrical energy available from a fully charged cell or cells. Its value depends on the discharge current, the temperature during discharge, the final (cut-off) voltage and the general history of the battery.

Table 2 shows capacities for various multiples of the 20-hour discharge current for PS, PSH and PSG models.

| Rated Capacity | 20 Hour Rate | | 10 Hour Rate | | 5 Hour Rate | | 1 Hour Rate | |
|---|---|---|---|---|---|---|---|---|
| | Amps | AH | Amps | AH | Amps | AH | Amps | AH |
| 0.5 AH | **0.025** | **0.50** | 0.045 | 0.45 | 0.08 | 0.40 | 0.30 | 0.30 |
| 0.8 AH | **0.04** | **0.80** | 0.072 | 0.72 | 0.13 | 0.65 | 0.48 | 0.48 |
| 1.1 AH | **0.055** | **1.10** | 0.10 | 1.00 | 0.19 | 0.95 | 0.68 | 0.68 |
| 1.4 AH | **0.07** | **1.40** | 0.13 | 1.30 | 0.24 | 1.20 | 0.85 | 0.85 |
| 2.0 AH | **0.10** | **2.00** | 0.19 | 1.90 | 0.34 | 1.70 | 1.24 | 1.24 |
| 2.3 AH | **0.115** | **2.30** | 0.225 | 2.25 | 0.39 | 1.95 | 1.38 | 1.38 |
| 2.5 AH | **0.125** | **2.50** | 0.22 | 2.20 | 0.40 | 2.00 | 1.50 | 1.50 |
| 2.8 AH | **0.14** | **2.80** | 0.25 | 2.50 | 0.48 | 2.40 | 1.70 | 1.70 |
| 2.9 AH | **0.145** | **2.90** | 0.26 | 2.60 | 0.49 | 2.45 | 1.80 | 1.80 |
| 3.2 AH | **0.16** | **3.20** | 0.30 | 3.00 | 0.54 | 2.70 | 2.00 | 2.00 |
| 3.4 AH | **0.17** | **3.40** | 0.33 | 3.30 | 0.58 | 2.90 | 2.20 | 2.20 |
| 3.5 AH | **0.175** | **3.50** | 0.33 | 3.40 | 0.59 | 2.95 | 2.17 | 2.17 |
| 3.8 AH | **0.19** | **3.80** | 0.35 | 3.50 | 0.64 | 3.20 | 2.40 | 2.40 |
| 4.5 AH | **0.225** | **4.50** | 0.41 | 4.10 | 0.64 | 3.20 | 2.75 | 2.75 |
| 5.0 AH | **0.25** | **5.00** | 0.43 | 4.30 | 0.80 | 4.00 | 3.00 | 3.00 |
| 5.4 AH | **0.27** | **5.40** | 0.50 | 5.00 | 0.90 | 4.50 | 3.60 | 3.60 |
| 5.5 AH | **0.275** | **5.50** | 0.54 | 5.40 | 0.95 | 4.75 | 3.70 | 3.70 |
| 6.0 AH | **0.30** | **6.00** | 0.56 | 5.60 | 0.98 | 4.90 | 3.60 | 3.60 |
| 6.5 AH | **0.325** | **6.50** | 0.61 | 6.10 | 1.10 | 5.50 | 4.03 | 4.03 |
| 7.0 AH | **0.35** | **7.00** | 0.63 | 6.30 | 1.19 | 5.95 | 4.34 | 4.34 |
| 7.2 AH | **0.36** | **7.20** | 0.70 | 7.00 | 1.30 | 6.50 | 4.60 | 4.60 |
| 8.0 AH | **0.40** | **8.00** | 0.78 | 7.75 | 1.40 | 7.00 | 4.80 | 4.80 |
| 8.5 AH | **0.425** | **8.50** | 0.81 | 8.10 | 1.50 | 7.50 | 6.50 | 6.50 |
| 9.0 AH | **0.45** | **9.00** | 0.83 | 8.30 | 1.54 | 7.70 | 5.60 | 5.60 |
| 10.0 AH | **0.50** | **10.00** | 0.93 | 9.30 | 1.70 | 8.50 | 6.20 | 6.20 |
| 10.5 AH | **0.53** | **10.50** | 0.98 | 9.80 | 1.87 | 9.35 | 6.82 | 6.82 |
| 12.0 AH | **0.60** | **12.00** | 1.15 | 11.50 | 2.10 | 10.50 | 7.30 | 7.30 |
| 13.0 AH | **0.65** | **13.00** | 1.22 | 12.20 | 2.30 | 11.50 | 8.00 | 8.00 |
| 14.0 AH | **0.70** | **14.00** | 1.30 | 13.00 | 2.50 | 12.50 | 8.45 | 8.45 |
| 18.0 AH | **0.90** | **18.00** | 1.70 | 17.00 | 3.20 | 16.00 | 11.10 | 11.10 |
| 20.0 AH | **1.00** | **20.00** | 1.85 | 18.50 | 3.40 | 17.00 | 12.40 | 12.40 |
| 21.0 AH | **1.05** | **21.00** | 2.00 | 20.00 | 3.70 | 18.50 | 13.00 | 13.00 |
| 26.0 AH | **1.30** | **26.00** | 2.40 | 24.00 | 4.40 | 22.00 | 16.10 | 16.10 |
| 28.0 AH | **1.40** | **28.00** | 2.62 | 26.20 | 5.00 | 25.00 | 18.60 | 18.60 |
| 35.0 AH | **1.75** | **35.00** | 3.30 | 33.00 | 6.20 | 31.00 | 25.00 | 25.00 |
| 36.0 AH | **1.80** | **36.00** | 3.35 | 33.50 | 6.12 | 30.60 | 22.30 | 22.30 |
| 40.0 AH | **2.00** | **40.00** | 3.80 | 38.00 | 6.70 | 33.50 | 24.00 | 24.00 |
| 55.0 AH | **2.75** | **55.00** | 5.10 | 51.00 | 8.80 | 44.00 | 30.60 | 30.60 |
| 75.0 AH | **3.75** | **75.00** | 7.20 | 72.00 | 13.60 | 68.00 | 47.00 | 47.00 |
| 100.0 AH | **5.00** | **100.00** | 9.20 | 92.00 | 15.80 | 79.00 | 55.20 | 55.20 |
| 110.0 AH | **5.50** | **110.00** | 10.30 | 103.00 | 17.70 | 88.50 | 61.80 | 61.80 |
| 140.0 AH | **7.00** | **140.00** | 13.50 | 135.00 | 24.00 | 120.00 | 84.00 | 84.00 |
| 210.0 AH | **10.50** | **210.00** | 20.00 | 200.00 | 36.00 | 180.00 | 168.00 | 168.00 |

***Table 2: Capacities for various multiples of the 20-hour discharge current - PS, PSH and PSG models.***

## Capacity

Table 3 shows capacities for various multiples of the 20-hour discharge current for PG models.

| Rated Capacity | 20 Hour Rate | | 10 Hour Rate | | 5 Hour Rate | | 1 Hour Rate | |
|---|---|---|---|---|---|---|---|---|
| | Amps | AH | Amps | AH | Amps | AH | Amps | AH |
| 28.0 AH | 1.50 | 30.00 | **2.80** | **28.00** | 5.10 | 25.50 | 18.60 | 18.60 |
| 35.0 AH | 1.80 | 36.00 | **3.50** | **35.00** | 6.50 | 32.50 | 27.00 | 27.00 |
| 42.0 AH | 2.25 | 45.00 | **4.20** | **42.00** | 7.20 | 36.00 | 25.20 | 25.20 |
| 56.0 AH | 3.00 | 60.00 | **5.60** | **56.00** | 9.50 | 47.50 | 33.00 | 33.00 |
| 65.0 AH | 3.53 | 70.60 | **6.50** | **65.00** | 11.20 | 56.00 | 39.00 | 39.00 |
| 75.0 AH | 4.00 | 80.00 | **7.50** | **75.00** | 12.90 | 64.50 | 45.00 | 45.00 |
| 92.0 AH | 4.90 | 98.00 | **9.20** | **92.00** | 15.80 | 79.00 | 55.20 | 55.20 |
| 103.0 AH | 5.55 | 111.00 | **10.30** | **103.00** | 17.70 | 88.50 | 61.80 | 61.80 |
| 124.0 AH | 6.45 | 129.00 | **12.40** | **124.00** | 21.30 | 106.50 | 74.40 | 74.40 |
| 144.0 AH | 7.70 | 154.00 | **14.40** | **144.00** | 24.08 | 120.40 | 84.00 | 84.00 |
| 153.0 AH | 8.30 | 166.00 | **15.30** | **153.00** | 26.30 | 131.50 | 91.80 | 91.80 |
| 210 0 AH | 11.30 | 226.00 | **21.00** | **210.00** | 36.10 | 180.50 | 126.00 | 126.00 |

***Table 3: PG-Series batteries, by industry convention, are rated at their 10 hour rate.***

Capacity, expressed in ampere-hours (AH), is the product of the current discharged and the length of discharge time. The rated capacity (C) of a Power-Sonic battery (PS, PSH and PSG-Series) is measured by its performance over 20 hours of constant current discharge at a temperature of 20°C (68°F) to a cut off voltage of 1.75 volts/cell.

As an example, model PS-610, with a rated capacity of 1.1 AH will deliver 55mA (1/20 of 1.1 AH, or 0.05C) for 20 hours before the voltage reaches an end voltage of 5.25 volts.

By cycling the battery a few times or float charging it for a month or two, the highest level of capacity development is achieved. Power-Sonic batteries are fully charged before leaving the factory, but full capacity is realized only after the battery has been cycled a few times or been on float charge for some time.

When a battery discharges at a constant rate, its capacity changes according to the amperage load. Capacity increases when the discharge current is less than the 20 hour rate and decreases when the current is higher.

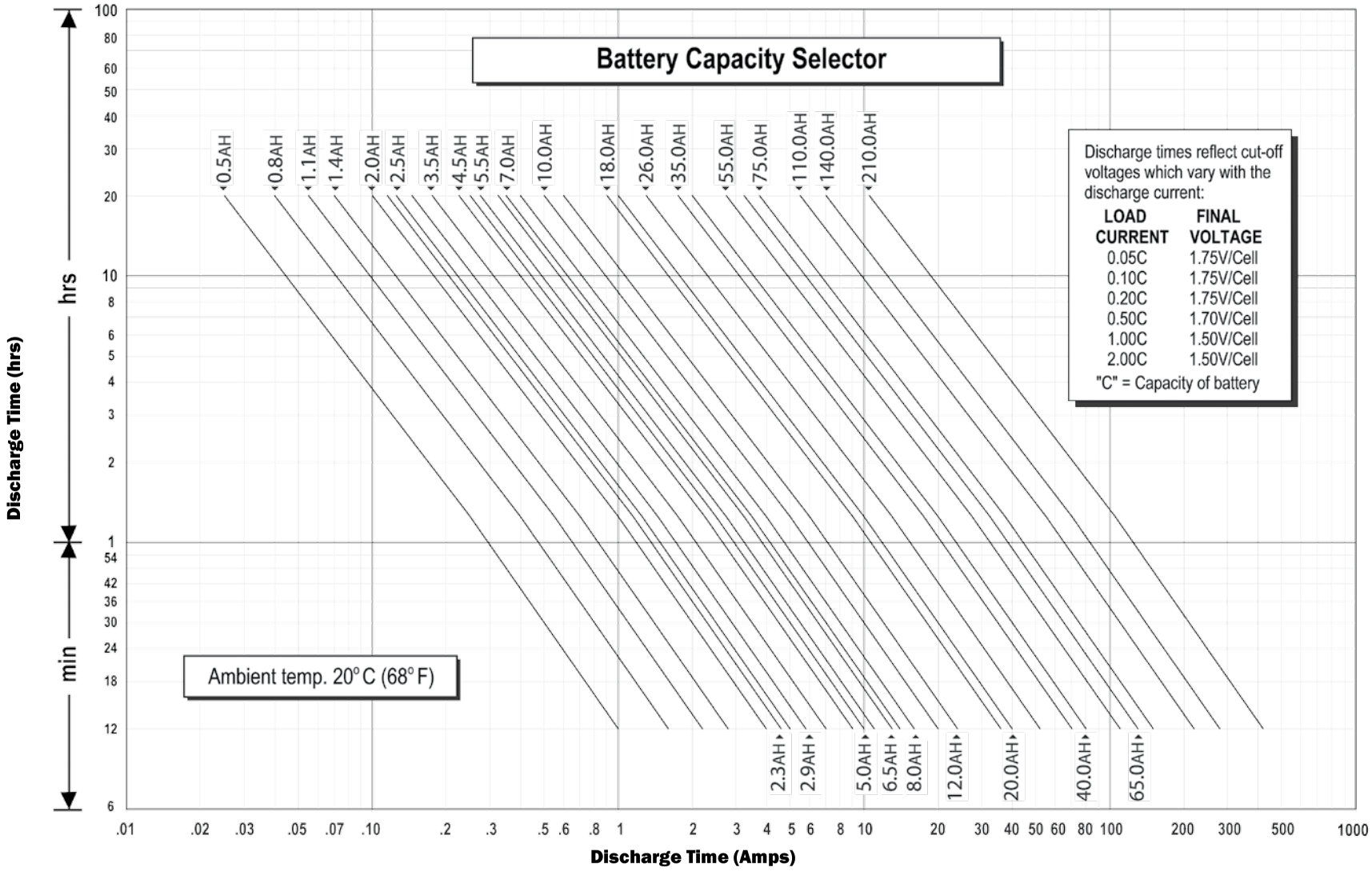


***Figure 3: Capacity lines for Power-Sonic batteries***

Figure 3 shows capacity lines for major Power-Sonic battery models with different ampere-hour ratings. Amperage is on the horizontal scale and the time elapsed is on the vertical scale; the product of these values is the capacity.

Proper battery selection for a specific application can be made from this graph if the required time and current are known. For example, to determine the proper capacity of a battery providing 3 amps for 20 minutes, locate the intersection of these values on the graph. The line immediately above that point represents the battery which will meet the requirement.

# Performance Data

## Discharge

During discharge the voltage will decrease. The graphs in Figure 4 illustrate this for different discharge rates and ambient temperatures. “C” is the rated capacity of a battery: “C” for model PS-610 (6V – 1.1 AH) is 1.1AH. By convention the rating of nearly all sealed-lead acid batteries, is based on a 20-hour (0.05C) discharge rate. For larger batteries used for telecom and large UPS systems (our PG-Series) the convention is to use a 10-hour rate (0.1C).

An important feature of Power-Sonic batteries is shown in the discharge curves; namely, the voltage tends to remain high and almost constant for a relatively long period before declining to an end voltage.

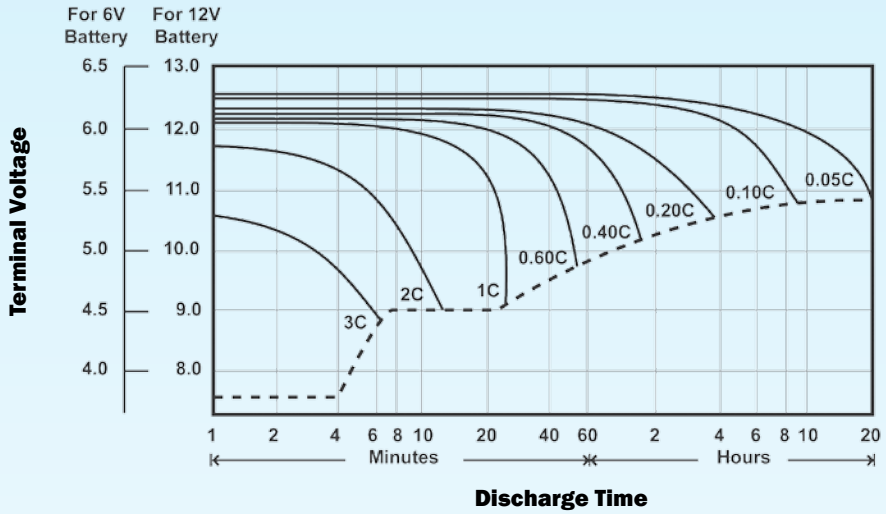


***Figure 4: Discharge Characteristic Curves at 20°C (68°F)***

## Open-Circuit Voltage

Open circuit voltage varies according to ambient temperature and the remaining capacity of the battery. Generally, open circuit voltage is determined by the specific gravity of the electrolyte. Discharging a battery lowers the specific gravity. The open circuit voltage of a Power-Sonic battery is 2.16 V/cell when fully charged and 1.94 V/cell when completely discharged.

As seen in Figure 4, under load, the battery can deliver useful energy at less than 1.94 V/cell, but after the load is removed the open circuit voltage will “bounce back” to voltages shown in Figure 5, dependent upon residual capacity.

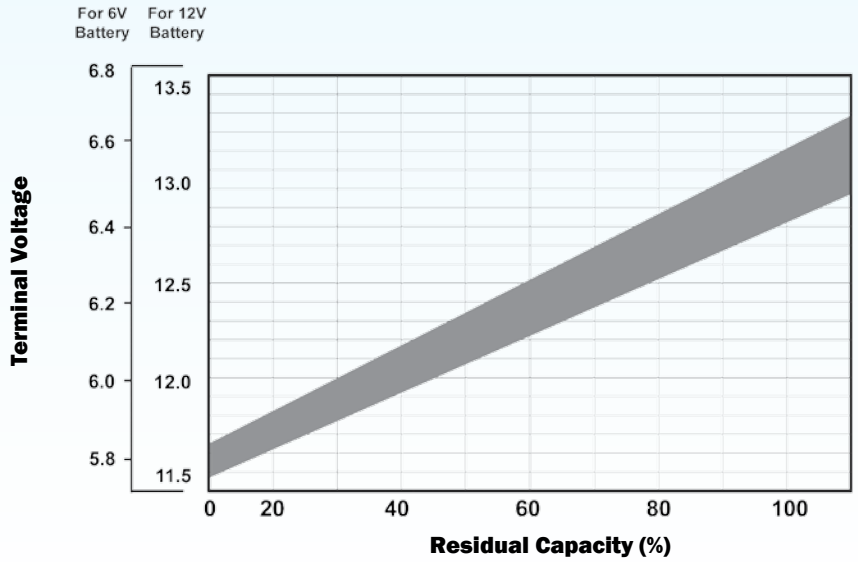


***Figure 5: Open-Circuit Voltage Characteristics***

# Performance Data

## Temperature

Actual capacity is a function of ambient temperature and rate of discharge. At 20°C (68°F) rated capacity is 100%. The capacity increases slowly above this temperature and decreases as the temperature falls. Even at -40ºC (-40°F), however, the Power-Sonic battery will still function at better than 30% of its rated capacity when discharged at the 20-hour rate (0.05C). At any ambient temperature, the higher the rate of discharge, the lower the available capacity. This relationship is shown in Figure 6.

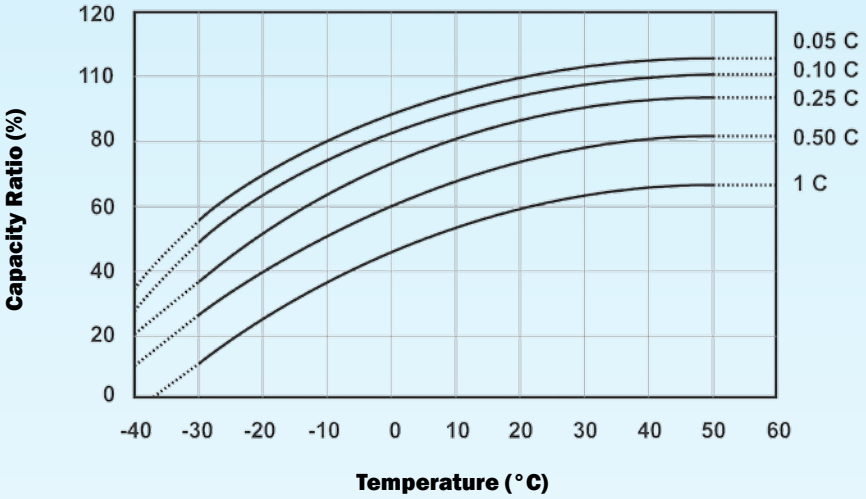


***Figure 6: Effect of Temperature on Capacity***

Power-Sonic batteries may be discharged at temperatures ranging from -40°C to 60°C (-40°F to 140°F) and charged at temperatures from -20°C to 50°C (-4°F to 122°F).

While raising ambient temperature increases capacity, it also decreases useful service life. It is estimated that battery life is halved for each 10°C (18°F) above normal room temperature.

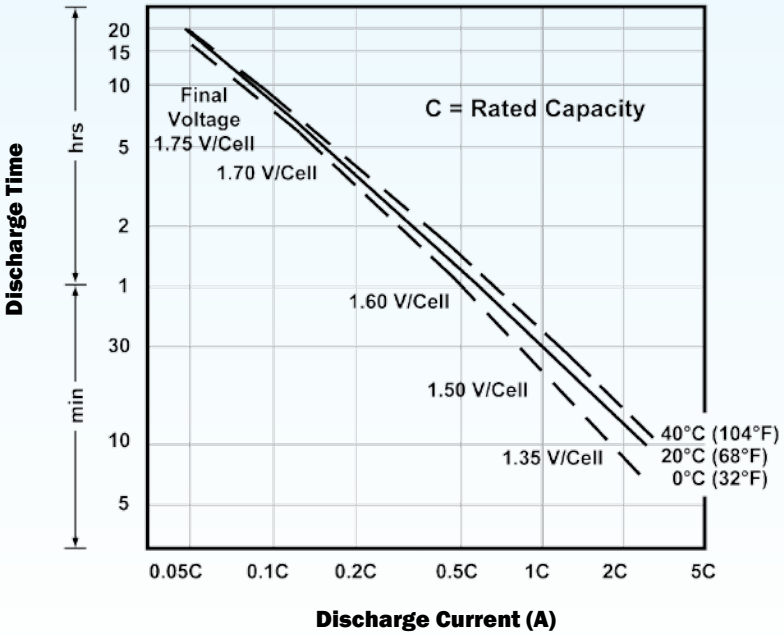


***Figure 7: Relationship between current and discharge time for different ambient temperatures***

# Performance Data

## Shelf Life & Storage

Low internal resistance and special alloys in the electrodes assure a low self discharge rate and, consequently, a long shelf life. If kept at 20°C (68°F), about 60-70% of the nominal capacity remains after one year of storage. Due to the self-discharge characteristics of this type of battery, it is imperative that they be charged within 6 months of storage, otherwise permanent loss of capacity might occur as a result of sulfation.

The rate of self discharge varies with the ambient temperature. At room temperature (20°C (68°F)) it is about 3% per month. At low temperatures it is nearly negligible; at higher ambient temperatures self discharge increases.
To obtain maximum battery life and performance, batteries should be recharged as soon as possible after each use and not stored in a discharged state. If possible batteries should be stored at 20°C (68°F) or lower, and recharged every six months when not in use.

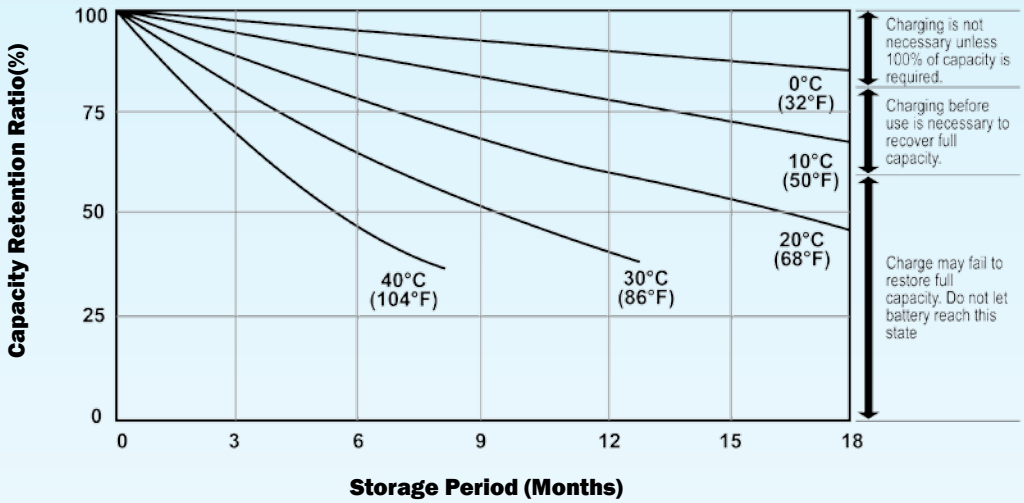


**Figure 8: Self Discharge Characteristics**

## Battery Life

Cyclic Use: The number of charge/discharge cycles depends on the capacity taken from the battery (a function of discharge rate and depth of discharge), operating temperature and the charging method.

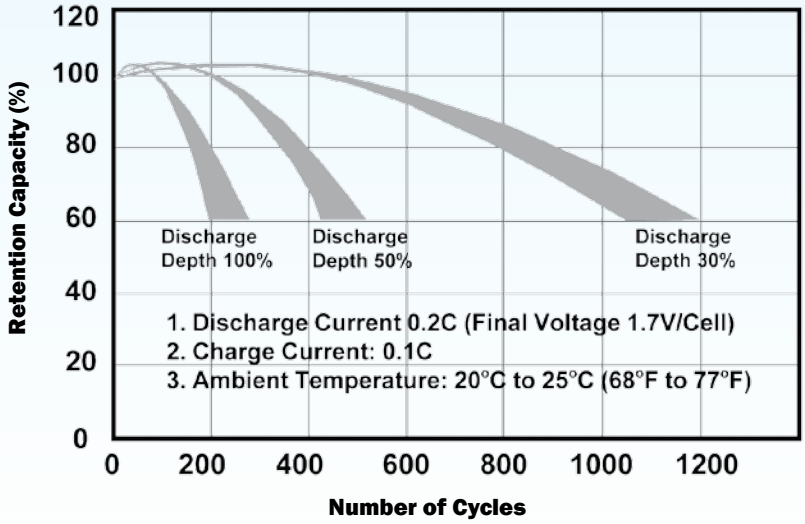


***Figure 9: Relationship between depth of discharge and number of cycles as well as increases of capacity during the early cycles.***

## Battery Life (continued)

Standby Use: The float service life, or life expectancy under continuous charge, depends on the frequency and depth of discharge, the charge voltage, and the ambient temperature. At a float voltage of 2.25V to 2.30V/cell and an ambient temperature of 20°C to 25°C (60°F to 77°F) Power-Sonic batteries should last four to five years before the capacity drops to 60% of its original rating.

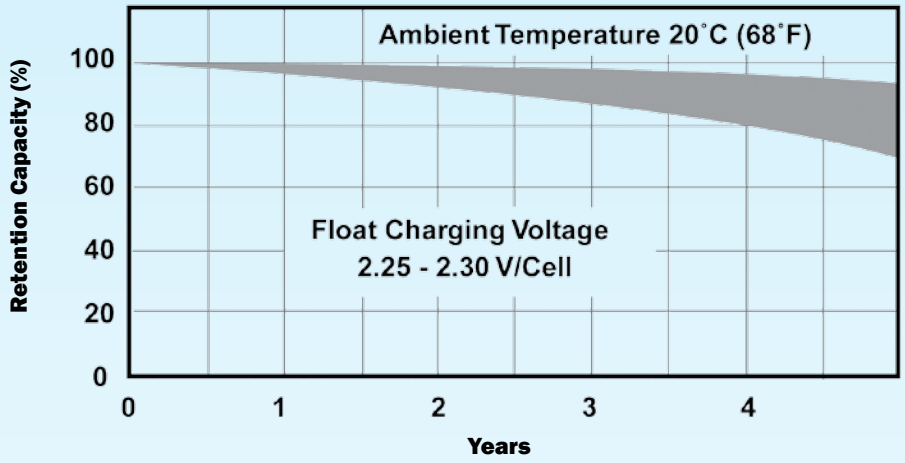


***Figure 10: Indicates how capacity changes over time.***

The graph in Figure 11 shows life characteristics in float (standby) service for ambient temperatures ranging from 15°C to 55°C (60°F to 130°F). If prevailing ambient temperatures are well above 20°C to 25°C (68°F to 77°F) the life expectancy of this type of battery in float service depends greatly on temperature compensated charging. The typical temperature coefficient is 2mV/cell/20°C and under.

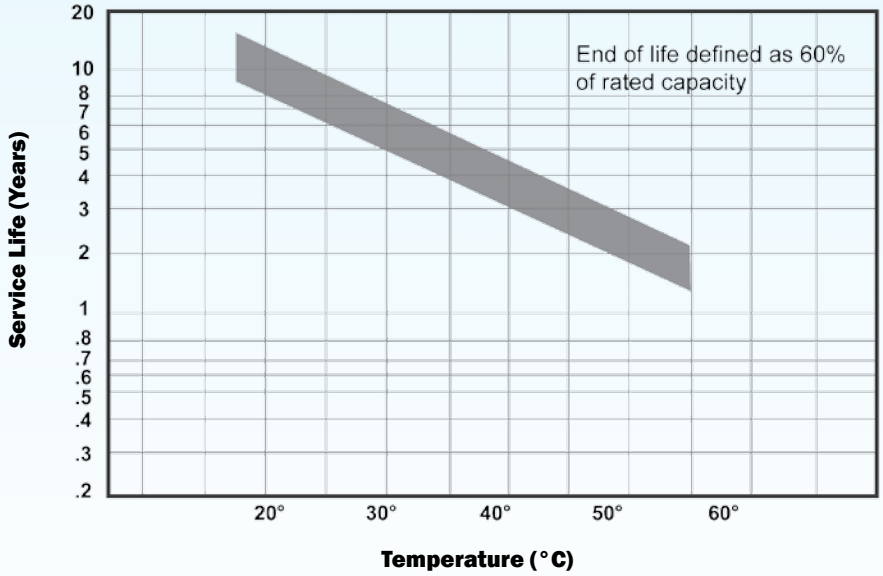


***Figure 11: Service life at various ambient temperatures***

## Over Discharge

To optimize battery life, it is recommended that the battery be disconnected from the load (either electronically or manually) when the end voltage - a function of the discharge rate - is reached. It is the voltage point at which 100% of the usable capacity of the battery has been consumed or continuation of the discharge is useless because of the voltage dropping below useful levels. The final discharge voltages per cell are shown in Table 1 (Page 4).

Discharging a sealed lead-acid battery below this voltage or leaving a battery connected to a load will impair the battery's ability to accept a charge. To prevent potential over discharge problems, voltage cut off circuits as shown in Figure 12 may be used.

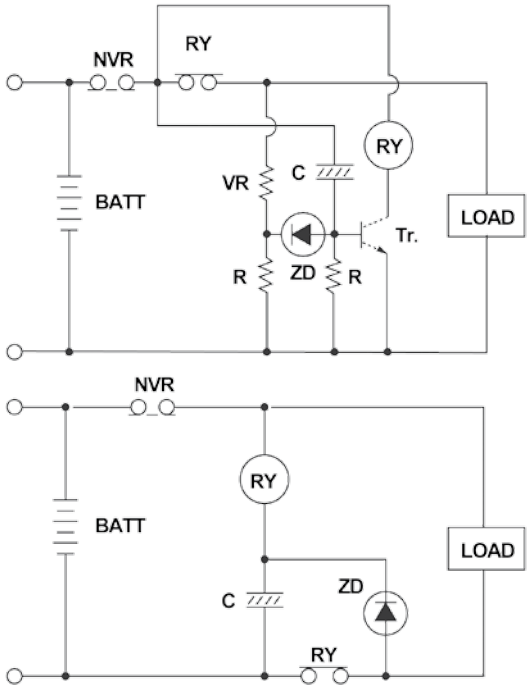


***Figure 12: Circuits of Over-Discharge Preventative Device***

## Charging

Dependable performance and long service life depend upon correct charging. Faulty procedures or inadequate charging equipment result in decreased battery life and/or unsatisfactory performance. The selection of suitable charging circuits and methods is as important as choosing the right battery for the application.

Power-Sonic batteries may be charged by using any of the conventional charging techniques:

- Constant Voltage
- Constant Current
- Taper-Current
- Two Step Constant Voltage

To obtain maximum service life and capacity, along with acceptable recharge time and economy, constant voltage-current limited charging is recommended.

To charge a Power-Sonic SLA battery, a DC voltage between 2.30 volts per cell (float) and 2.45 volts per cell (fast) is applied to the terminals of the battery. Depending on the state of charge, the cell may temporarily be lower after discharge than the applied voltage. After some time, however, it should level off.

During charge, the lead sulfate of the positive plate becomes lead dioxide. As the battery reaches full charge, the positive plate begins generating dioxide causing a sudden rise in voltage due to decreasing internal resistance. A constant voltage charge, therefore, allows detection of this voltage increase and thus control of the current charge amount.

Additional information regarding charging methods can be found on pages 13 through 19.

# Charging

## Charging Characteristics

During constant voltage or taper charging, the battery's current acceptance decreases as voltage and state of charge increase. The battery is fully charged once the current stabilizes at a low level for a few hours. There are two criteria for determining when a battery is fully charged: (1) the final current level and (2) the peak charging voltage while this current flows.

## Charging Methods

Selecting the appropriate charging method depends on the intended use (cyclic or float service), economic considerations, recharge time, anticipated frequency and depth of discharge, and expected service life. The key goal of any charging method is to control the charge current at the end of the charge.

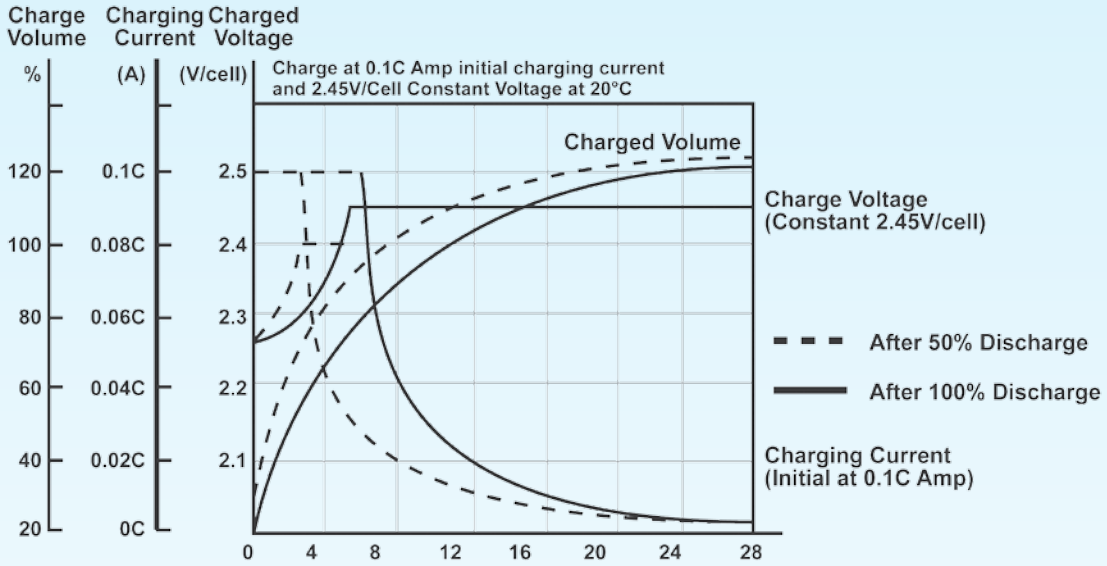


***Figure 13: Typical charge characteristics for cycle service where charging is non-continuous and peak voltage can be higher.***

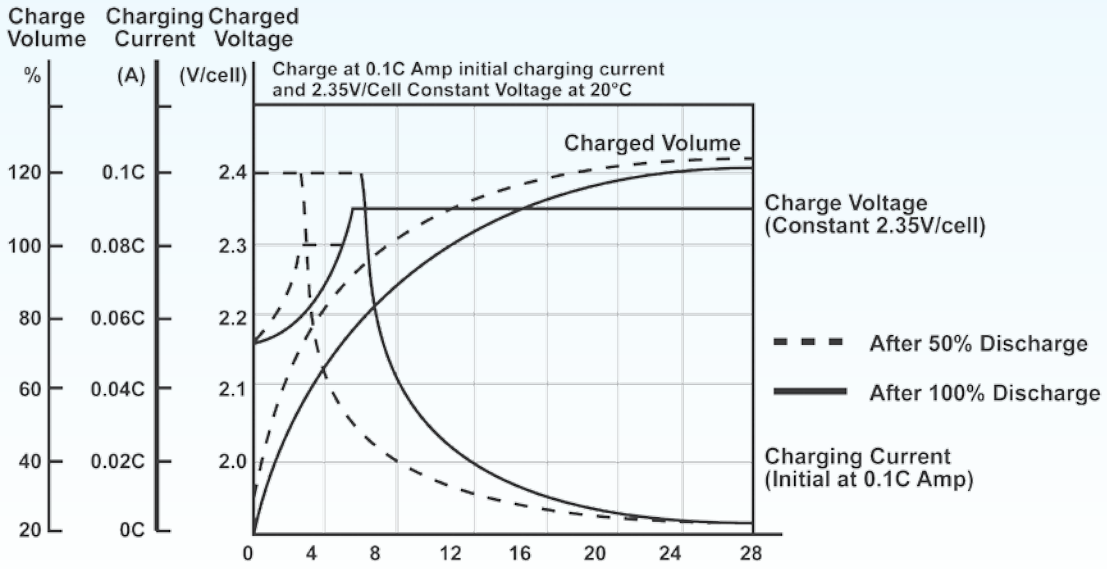


***Figure 14: Typical characteristics for standby service type charge. Here, charging is continuous and the peak charge voltage must be lower.***

# Charging

## Constant Voltage Charging

Constant voltage charging is the best method to charge Power-Sonic batteries. Depending on the application, batteries may be charged either on a continuous or non-continuous basis. In applications where standby power is required to operate when the AC power has been interrupted, continuous float charging is recommended. Non-continuous cyclic charging is used primarily with portable equipment where charging on an intermittent basis is appropriate.

The constant voltage charge method applies a constant voltage to the battery and limits the initial charge current. It is necessary to set the charge voltage according to specified charge and temperature characteristics. Inaccurate voltage settings cause over- or under-charge. This charging method can be used for both cyclic and standby applications.

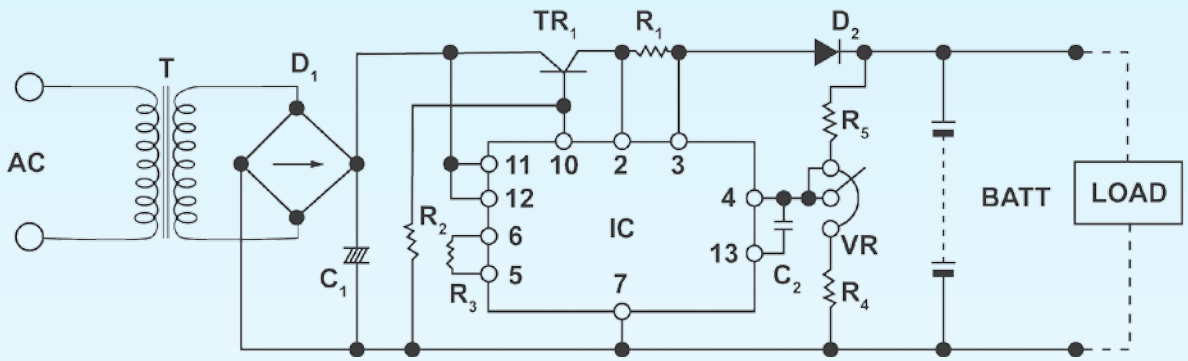


***Figure 15: Constant voltage charging circuit***

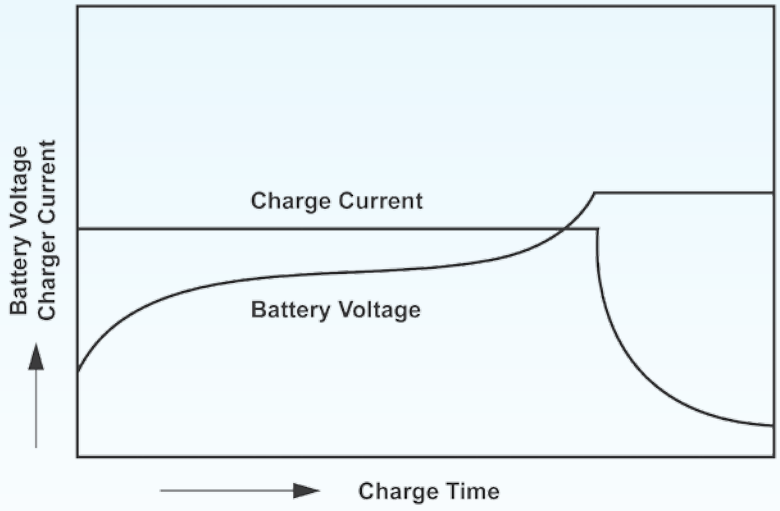


***Figure 16: Constant voltage charging characteristics***

# Charging

## Constant Current Charging

Constant current charging is suited for applications where discharged ampere-hours of the preceding discharge cycle are known. Charge time and charge quantity can easily be calculated, however an expensive circuit is necessary to obtain a highly accurate constant current. Monitoring of charge voltage or limiting of charge time is necessary to avoid excessive overcharge.

While this charging method is very effective for recovering the capacity of a battery that has been stored for an extended period of time, or for occasional overcharging to equalize cell capacities, it lacks specific properties required in today's electronic environment.

## Taper-Current Charging

This method is not recommended as it is somewhat abusive of sealed lead acid batteries and can shorten service life. However, because of the simplicity of the circuit and low cost, taper-current charging is extensively used to charge multiple numbers and/or for cyclic charging.

When using a taper-current charger the charger time should be limited or a charging cut-off circuit be incorporated to prevent overcharge. Please contact our technical department if you need assistance with this.

In a taper-current charging circuit, the current decreases in proportion to the voltage rise. When designing a taper charger always consider power voltage fluctuations. In this event the internal resistance drop will convert to heat. Heat generated by the circuit should be measured and if required a heat sink should be incorporated in the design.

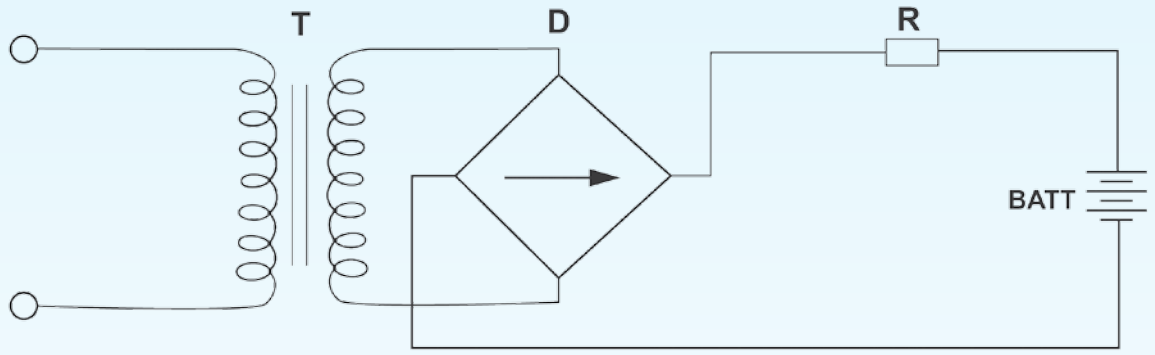


***Figure 17: Taper-current charging circuit***

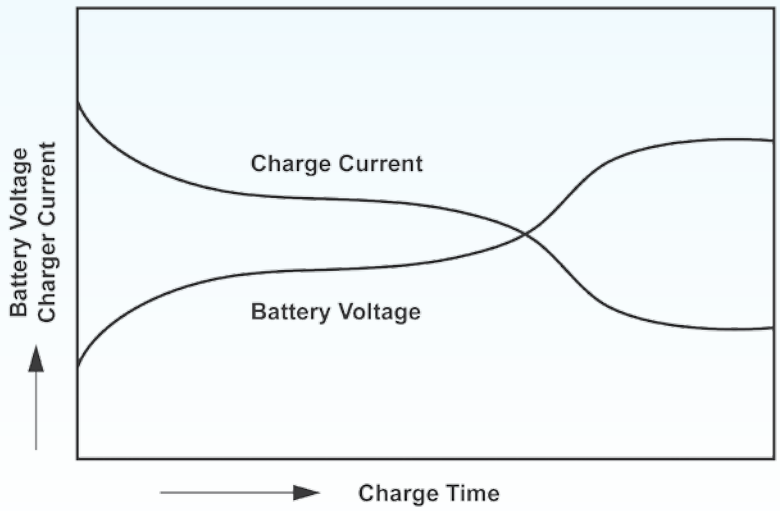


***Figure 18: Taper-current charging characteristics for this type of basically unregulated charger.***

# Charging

## Overcharging

As a result of too high a charge voltage excessive current will flow into the battery, after reaching full charge, causing decomposition of water in the electrolyte and premature aging.

At high rates of overcharge a battery will progressively heat up. As it gets hotter, it will accept more current, heating up even further. This is called thermal runaway and it can destroy a battery in as little as a few hours.

## Undercharging

If too low a charge voltage is applied, the current flow will essentially stop before the battery is fully charged. This allows some of the lead sulfate to remain on the electrodes, which will eventually reduce capacity.

Batteries which are stored in a discharged state, or left on the shelf for too long, may initially appear to be "open circuited" or will accept far less current than normal. This is caused by a phenomenon called "sulfation". When this occurs, leave the charger connected to the battery. Usually, the battery will start to accept increasing amounts of current until a normal current level is reached. If there is no response, even to charge voltages above recommended levels, the battery may have been in a discharged state for too long to recover.

**Caution! Never charge or discharge a battery in a hermetically sealed enclosure. Batteries generate a mixture of gases internally. Given the right set of circumstances, such as extreme overcharging or shorting of the battery, these gases might vent into the enclosure and create the potential for an explosion when ignited by a spark.**

If in any doubt, or if concepts of proper use and care are unclear, please ensure that you contact Power-Sonic's technical department.

## Charging for Cycle Operation

Cyclic applications generally require that recharging be done in a relatively short time. The initial charge current, however, must not exceed 0.30 x C amps. Just as battery voltage drops during discharge, it slowly rises during charge. Full charge is determined by voltage and inflowing current. When, at a charge voltage of 2.45 ± 0.05 volts/cell, the current accepted by the battery drops to less than 0.01 x C amps (1% of rated capacity), the battery is fully charged and the charger should be disconnected or switched to a float voltage of 2.25 to 2.30 volts/cell. The voltage should not be allowed to rise above 2.45 ± 0.05 volts/cell.

## Charging for Standby Operation

Standby applications generally do not require that the battery be charged as fast or as frequently as in cycle operation. However, the battery must be kept constantly charged to replace the energy that is expended due to internal loss and deterioration of the battery itself. Although these losses are very low in Power-Sonic batteries, they must be replaced at the rate the battery self discharges; at the same time the battery must not be given more than these losses or it will be overcharged. To accomplish this, a constant voltage method of charging called "float charging" is used.

The recommended constant float voltage is 2.25 - 2.30 volts per cell. Maintaining this float voltage will allow the battery to define its own current level and remain fully charged without having to disconnect the charger from the battery. The trickle current for a fully charged battery floating at the recommended charge voltage will typically hover around the 0.001C rate (10mA for a 10AH battery, for example.)

The float charger is basically a constant voltage power supply. As in cycle chargers, care must be exercised not to exceed the initial charge current of 0.30 x C amperes.

# Charging

## Two-Step Constant Voltage Charging

This method uses two constant voltage devices. In the initial charge phase the high voltage setting is used. When charging is nearly complete and the charge voltage has risen to a specified value (with the charge current decreased), the charger switches the voltage to the lower setting. This method allows rapid charging in cycle or float service without the possibility of overcharging, even after extended charging periods.

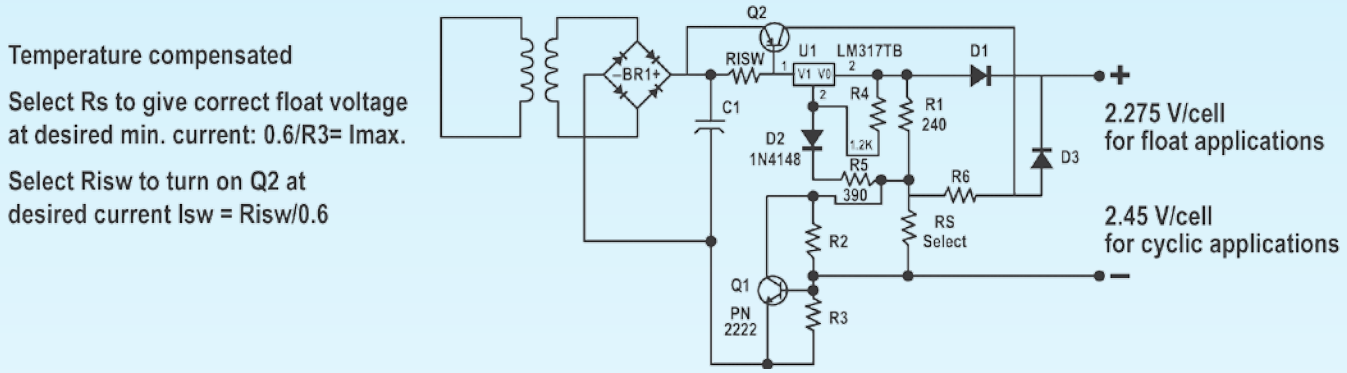


***Figure 19: Dual stage current limited battery charger.***

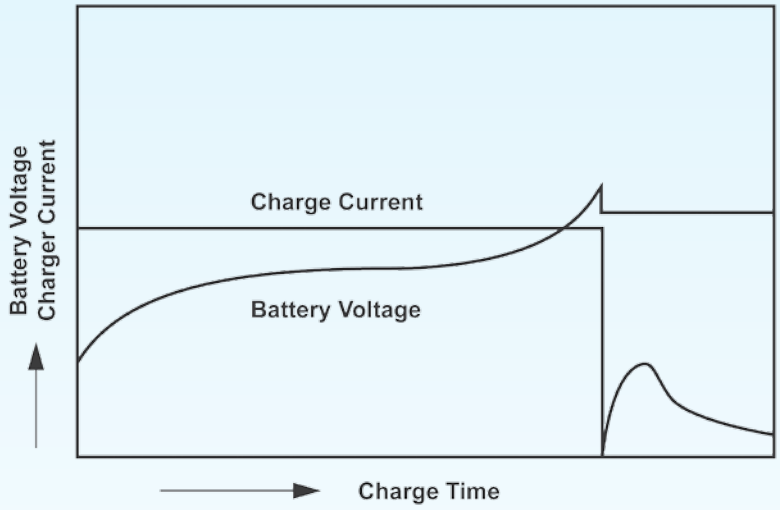


***Figure 20: Two-step constant voltage charging characteristics.***

## Charging in Series

Lead-acid batteries are strings of 2 volt cells connected in series, commonly 2, 3, 4 or 6 cells per battery. Strings of Power-Sonic batteries, up to 48 volts and higher, may be charged in series safely and efficiently. However, as the number of batteries in series increases, so does the possibility of slight differences in capacity. These differences can result from age, storage history, temperature variations or abuse.

Fully charged batteries should never be mixed with discharged batteries when charging in series. The discharged batteries should be charged before connection.

When a single constant voltage charger is connected across an entire high voltage string, the same current flows through all cells in the string. Depending on the characteristics of the individual batteries, some may overcharge while others remain in a slightly undercharged condition.

To minimize the effects of individual battery differences, use batteries of the same age, amp hour, and history and, if possible, charge in strings of no greater than 24 or 48 volts.

# Charging

## Charging in Parallel

Power-Sonic batteries may be used in parallel with one or more batteries of equal voltage.

When connected in parallel, the current from a charger will tend to divide almost equally between the batteries. No special matching of batteries is required. If the batteries of unequal capacity are connected in parallel, the current will tend to divide between the batteries in the ratio of capacities (actually, internal resistances).

When charging batteries in parallel, where different ratios of charge are to be expected, it is best to make provisions to assure that the currents will not vary too much between batteries.

## Temperature Compensation

Power-Sonic batteries perform well both at low and high temperatures. At low temperatures, however, charge efficiency is reduced; at temperatures above 45°C (113°F), charge efficiency increases so rapidly that there is a danger of thermal runaway if temperature compensation is not precise.

The effect of temperature on charge voltage is less critical in float applications than in cyclic use, where relatively high charge currents are applied for the purpose of short recharge times.

Temperature effects should definitely be considered when designing or selecting a charging system. Temperature compensation is desirable in the charging circuit, especially when operating outside the range of 5°C to 35°C (41°F to 95°F). The temperature coefficient is -2mV/cell/°C below 20°C (68°F) in float use and -6mV/cell/ °C below 20°C in cyclic use. For higher temperatures the charge voltage should be correspondingly decreased.

***Ambient Charge Voltage Per Cell***

| Temperature | Cyclic Use (V) | Float Use (V) |
|---|---|---|
| -40°C (-40°F) | 2.85 – 2.95 | 2.38 – 2.43 |
| -20°C (-4°F) | 2.67 – 2.77 | 2.34 – 2.39 |
| -10°C (14°F) | 2.61 – 2.71 | 2.32 – 2.37 |
| 0°C (32°F) | 2.55 – 2.65 | 2.30 – 2.35 |
| 10°C (50°F) | 2.49 – 2.59 | 2.28 – 2.33 |
| 20°C (68°F) | 2.43 – 2.53 | 2.26 – 2.31 |
| 25°C (77°F) | 2.40 – 2.50 | 2.25 – 2.30 |
| 30°C (86°F) | 2.37 – 2.47 | 2.24 – 2.29 |
| 40°C (104°F) | 2.31 – 2.41 | 2.22 – 2.27 |
| 50°C (122°F) | 2.25 – 2.35 | 2.20 – 2.25 |

***Table 4: Recommended charge voltages for different temperatures.***

## Top Charging

All battery lose capacity through self-discharge, it is recommended that a “top up charge” be applied to any battery that has been stored for a long period of time, prior to putting the battery into service.

To successfully top charge a battery stored for more than 12 months, the open circuit voltage must be higher than 2.0 volts per cell, in this case, always confirm open circuit voltage prior to attempting top up charging.

# Charging

## Charging Efficiency

The charging efficiency (η) of a battery is expressed by the following formula:

$$\eta = \frac{\text{AH Discharged After Fully Charged}}{\text{AH Delivered to Battery During Charge}}$$

The charging efficiency varies depending upon the state of charge of the battery, temperatures, and charging rates. Figure 21 illustrates the concept of the state of charge and charging efficiency. As shown in Figure 22. Power-Sonic batteries exhibit very high charging efficiency, even when charged at low charging rates.

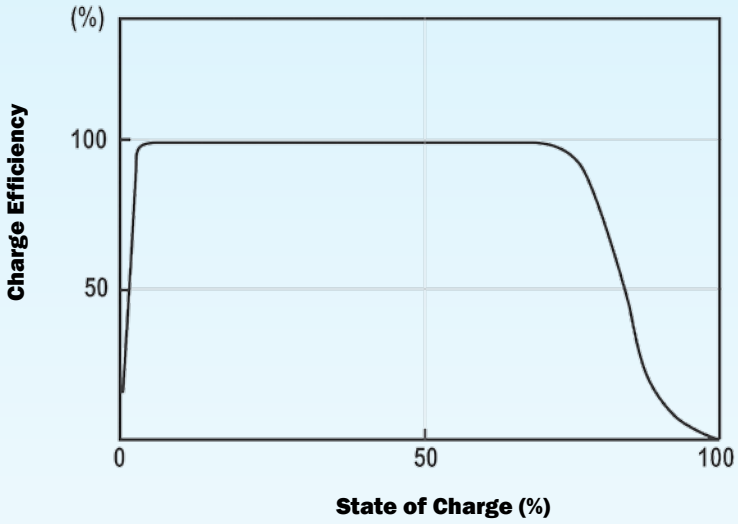


***Figure 21: Charge efficiency vs. state of charge.***

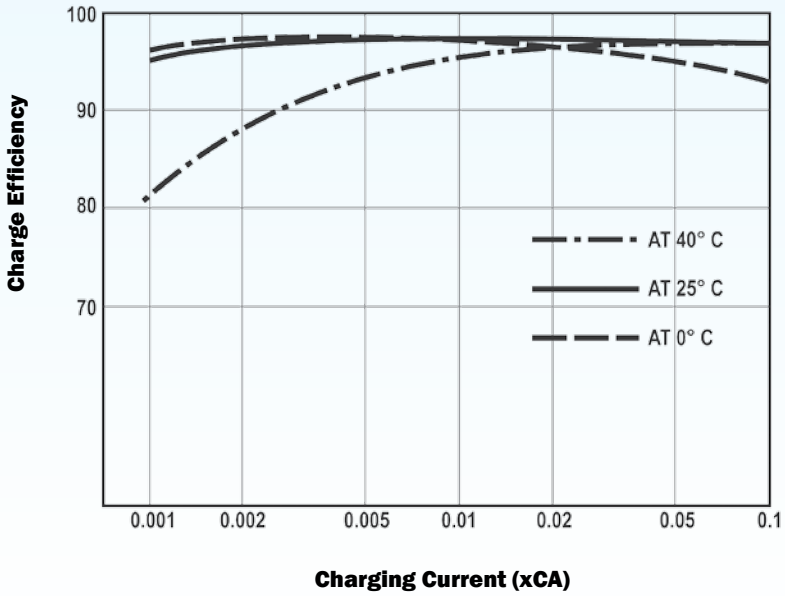


***Figure 22: Charge efficiency vs. charging current.***

# Important Do's and Don'ts

Power-Sonic rechargeable sealed lead-acid batteries are designed to provide years of dependable service. Adherence to the following guidelines will ensure that battery life is maximized and operation is trouble-free.

## Material Safety Data Sheets (MSDS)

- It is important that you familiarize yourself with these prior to handling, installing and disposing of all batteries. If there are any questions raised from these please contact Power-Sonic's technical department.

## Handling

- Always wear insulated gloves when handling batteries; especially when connecting series and parallel groups of batteries.
- Follow all precautions as described in our Materials Safety Data Sheets (MSDS). This information is subject to change depending upon government legislation. Visit our website: www.power-sonic.com for up-to-date copies of these.
- If equipment is to be stored for a long period of time the batteries should be disconnected to avoid undue drain on the batteries and any potential for damage to the equipment.

## Installation

- Fasten batteries tightly and make provisions for shock absorption if exposure to shock or vibration is likely.
- When installing the battery within a piece of equipment, fix it securely at the lowest practicable point.
- The battery should not be attached to any piece of equipment during "burn-in" testing.
- Do not apply undue force to the terminals or bend them. Avoid applying heat to the terminals through processes such as soldering.
- If soldering to the battery terminals is unavoidable it must be accomplished within 3 seconds, using a soldering iron no greater than 100 watts.
- Do not place batteries in close proximity to objects which can produce sparks or flames, and do not charge batteries in an inverted position.
- Avoid exposing batteries to heat! Care should be taken to place batteries away from heat-emitting components. If close proximity is unavoidable, provide ventilation. Service life is shortened considerably' at ambient temperatures above 30°C (86°F).
- To prevent problems arising from heat exchange between batteries connected in series or parallel, it is advisable to provide air space of at least 0.4" (10mm) between batteries.
- Do not mix batteries with different capacities, different ages or of different makes. The difference in characteristics will cause damage to the batteries and possibly to the attached equipment.
- Battery cases and lids made of ABS plastic can sustain damage if exposed to organic solvents or adhesives.
- For best results and generally acceptable performance and longevity, keep operating temperature range between -40°C (-40°F) and 60°C (140°F).
- It is good practice to ensure that the connections are re-torqued and the batteries are cleaned periodically.
- Do not attempt to disassemble batteries. Contact with sulfuric acid may cause harm. Should it occur, wash skin or clothes with liberal amounts of water. Do not throw batteries into a fire; batteries so disposed may rupture or explode. Disassembled batteries are hazardous waste and must be treated accordingly.

# Important Do's and Don'ts

## Charging

- Batteries should not be stored in a discharged state or at elevated temperatures. If a battery has been discharged for some time, or the load was left on indefinitely, it may not readily take a charge. To overcome this, leave the charger connected and the battery should eventually begin to accept charge.
- Continuous over-or undercharging is the single worst enemy of a lead-acid battery. Caution should be exercised to ensure that the charger is disconnected after cycle charging, or that the float voltage is set correctly.
- Although Power-Sonic batteries have a low self-discharge rate which permits storage of a fully charged battery for up to a year, it is important that a battery be charged within 6 months after receipt to account for storage from the date of manufacture to the date of purchase. Otherwise, permanent loss of capacity might occur as a result of sulfation. To prolong shelf life without charging, store batteries at 10°C (50°F) or less.
- Although it is possible to charge Power-Sonic batteries rapidly, i.e. in 6-7 hrs. it is not normally recommended. Unlimited current charging can cause increased off-gassing and premature drying. It can also produce internal heating and hot spots resulting in shortened service life. Too high a charge current will cause a battery to get progressively hotter. This can lead to "thermal runaway" and can destroy a battery in as little as a few hours.
- Caution: Never charge or discharge a battery in an airtight enclosure. Batteries generate a mixture of gases internally. Given the right set of circumstances, such as extreme overcharging or shorting of the battery, these gases might vent into the enclosure and create the potential for an explosion when ignited by a spark. Generally, ventilation inherent in most enclosures is sufficient to avoid problems.
- When charging batteries in series (positive terminal of one battery is connected to the negative terminal of another) the interconnecting cables must all be of equal length and resistance to insure equalization of the load. All batteries in the string will receive the same amount of charge current, though individual battery voltages may vary.
- When charging batteries in parallel (positive terminals are connected to the positive terminal and negative terminals to the negative), all batteries in the string will receive the same charge voltage, but the charge current each battery receives will vary until equalization is reached.
- High voltage strings of batteries in series should be limited to twenty 6 volt or ten 12 volt batteries when a single constant voltage charger is connected across the entire string. Differences in capacity can cause some batteries to overcharge while others remain undercharged thus causing premature aging of batteries. It is, therefore, not advisable to mix batteries of different capacities, make, or age in a series string.
- To minimize the effects of cell or battery differences, charge the string in 24 volt battery groups through a constant current source with zener diode regulation across individual batteries or battery groups.
- Recharge time depends on the depth of the preceding discharge and the output current of the charger. To determine the approximate recharge time of a fully discharged battery, divide the battery's capacity (amp. hrs) by the rated output of the charger current (amps) and multiply the resulting number of hours by a factor of 1.75 to compensate for the declining output current during charge. If the amount of amp. hrs. discharged from the battery is known, use it instead of the battery's capacity to make the calculation.

## Notes

## Notes

# Glossary

## Active Material
The active electro-chemical materials used in the manufacture of positive and negative electrodes.

## Ambient Temperature
The prevailing surface temperature to which a battery is exposed.

## Ampere
Unit of measurement for electric current.

## Ampere-Hour
The product of current (amperes) multiplied by time (hours). Used to indicate the capacity of a battery. Also Amp. Hr. or A.H.

## Battery
Two or more cells connected together, most typically in series.

## C
Used to signify a charge or discharge rate equal to the capacity of a battery divided by one hour. Thus C for a 1600 mAh battery would be 1.6 A. C/5 for the same battery would be 320 mA and C/10 would be 160 mA.

## Capacity
The electrical energy available from a cell or battery expressed in ampere-hours.

- **Available capacity**: ampere-hours that can be discharged from a battery based on its state of charge, rate of discharge, ambient temperature, and specified cut-off voltage.
- **Rated capacity ("C")**: the discharge capacity the manufacturer states may be obtained at a given discharge rate and temperature.
- **Capacity fade**: the loss of capacity due to inadequate recharging.

## Cell
The basic building block of a battery. The nominal voltage of a lead-acid cell is 2 volts.

- **Cell reversal:** the act of driving a cell into reverse polarity by excessive discharge.
- **Primary cell:** cell or battery that can be discharged only once.
- **Secondary cell:** the process is reversible so that charging and discharging may be repeated over and over.

## Charge
The conversion of electrical energy to chemical energy; the process which restores electrical energy to a cell or battery.

- **Charge retention**: a battery's ability to hold a charge. It diminishes during storage.
- **Charge acceptance**: quantifies the amount of electric charge that accumulates in a battery.
- **Float charge**: maintains the capacity of a cell or battery by applying a constant voltage.

## Charge (Continued)

- **Trickle charge**: maintains the capacity of a cell or battery by applying a small constant current.
- **Charge equalization**: brings all of the cells in a battery or string to the same state of charge.

## Closed Circuit Voltage Test
A test method in which the battery is briefly discharged at a constant current while the voltage is measured.

## Cutoff Voltage
The final voltage of a cell or battery at the end of charge or discharge.

## Cycle
A single charge and discharge of a cell or battery.

## Deep Cycle
A cycle in which the discharge continues until the battery reaches it's cut-off voltage, usually 80% of discharge.

## Direct Current (DC)
The type of electrical current that a battery can supply. One terminal is always positive and the other always negative.

## Discharge
The process of drawing current from a battery.

- **Deep Discharge**: the discharge of a cell or battery to between 80% and 100% of rated capacity.
- **Depth of Discharge**: the amount of capacity - typically expressed as a percentage - removed during discharge.
- **Self Discharge**: the loss of capacity while stored or while the battery is not in use.
- **Self Discharge Rate**: the percent of capacity lost on open circuit over a specified period of time.

## Drain
The withdrawal of current from a battery.

## Electrode
Positive or negative plate containing materials capable of reacting with electrolyte to produce or accept current.

## Electrolyte
Conducts ions in a cell. Lead acid batteries use a sulfuric acid solution.

## End of Charge Voltage
The voltage reached by the cell or battery at the end of charge, while the charger is still attached.

## Energy Density
Ratio of battery energy to volume or weight expressed in watt-hours per cubic inch or pound.

# Glossary

### Gas Recombination
The process by which oxygen gas generated from the positive plate during the final stage of charge is absorbed into the negative plate, preventing loss of water.

### High Rate Discharge
A very rapid discharge of the battery. Normally in multiples of C (the rating of the battery expressed in amperes).

### Impedance
The resistive value of a battery to an AC current expressed in ohms (Ω). Generally measured at 1000 Hz at full charge.

### Internal Resistance
The resistance inside a battery which creates a voltage drop in proportion to the current draw.

### Negative Terminal
The terminal of a battery from which electrons flow in the external circuit when a battery discharges. See Positive Terminal

### Nominal Voltage / Nominal Capacity
The nominal value of rated voltage / the nominal value of rated capacity. The nominal voltage of a lead-acid battery is 2 volts per cell.

### Open Circuit Voltage
The voltage of a battery or cell when measured in a no load condition.

### Overcharge
The continuous charging of a cell after it achieves 100% of capacity. Battery life is reduced by prolonged overcharging.

### Parallel Connection
Connecting a group of batteries or cells by linking all terminals of the same polarity. This increases the capacity of the battery group.

### Polarity
The charges residing at the terminals of the battery.

### Positive Terminal
The terminal of a battery toward which electrons flow through the external circuit when the cell discharges. See Negative Terminal.

### Rated Capacity
The capacity of the cell expressed in amperes. Commonly, a constant current for a designated number of hours to a specified depth of discharge at room temperature.

### Recombination
The state in which the gasses normally formed within the battery cell during its operation are recombined to form water.

### Series Connection
The connection of a group of cells or batteries by linking terminals of opposite polarity. This increases the voltage of the battery group.

### Self Discharge
The loss of capacity of a battery while in stored or unused condition without external drain.

### Separator
Material isolating positive from negative plates. In sealed lead acid batteries it normally is absorbent glass fiber to hold the electrolyte in suspension.

### SLA Battery
Sealed lead-acid battery, generally having the following characteristics: Maintenance-free, leak-proof, position-insensitive. Batteries of this type have a safety vent to release gas in case of excessive internal pressure build-up. Hence also the term: Valve regulated battery.

"Gel Cells" are SLA batteries whose dilute sulfuric acid electrolyte is immobilized by way of additives which turn the electrolyte into a gel.

### Service Life
The expected life of a battery expressed in the number of total cycles or years of standby service to a designated remaining percentage of original capacity.

### Shelf Life
The maximum period of time a battery can be stored without supplementary charging.

### Standby Service
An application in which the battery is maintained in a fully charged condition by trickle or float charging.

### State of Charge
The available capacity of a battery at a given time expressed as a percentage of rated capacity.

### Sulfation
The formation or deposit of lead sulfate on the surface and in the pores of the active material of the batteries' lead plates. If the sulfation becomes excessive and forms large crystals on the plates the battery will not operate efficiently and may not work at all.

### Thermal Runaway
A condition in which a cell or battery on constant potential charge can destroy itself through internal heat generation.

### Valve Regulated Lead Acid Battery (VRLA)
See "SLA Battery" listed above.


## Quality is always #1

We employ IQC, PQC and ISO 9001 Quality Management Systems to test materials, monitor manufacturing processes and evaluate finished products prior to shipment. All our batteries are 100% tested with advanced computer equipment prior to being released for sale.

Power-Sonic management and staff are committed to providing the best possible service to satisfy our customer's needs, and fulfill our undertaking to deliver top grade products on time and at a competitive price.

MH20845
Certificate of UL

CE
EMC tested
Germany
Certificate of CE

CNAB
Certificate of ISO9001

Our batteries are manufactured to international standards including JIS, DIN and IEC and have UL and CE certification.

**Corporate Headquarters and Domestic Sales**
Power-Sonic Corporation • 7550 Panasonic Way • San Diego, CA 92154 • USA
Phone: (619) 661-2020 • Fax: (619) 661-3650
Support: technical-support@power-sonic.com
Sales: national-sales@power-sonic.com
Customer Service: customer-service@power-sonic.com

**International Sales**
Power-Sonic Corporation • P.O. Box 5242 • Redwood City, CA 94063 • USA
Phone: (650) 364-5001 • Fax: (650) 366-3662
Sales: international-sales@power-sonic.com

**European Sales**
Power-Sonic Europe, Ltd. • 3 Buckingham Square, Hurricane Way • Wickford, Essex SS11 8YQ • England
Phone: (1268) 560686 • Fax: (1268) 560902
Sales: sales@power-sonic.co.uk
Website: www.power-sonic.co.uk

**www.power-sonic.com**

# Appendix C

Safety Data Sheets (batteries, oil, rotational molded plastics)

# Safety Data Sheet

**Issue Date:** 01-Jan-2014 **Revision Date:** 07-August-2020 **Version 1.1**

## 1. IDENTIFICATION

**Product Identifier**

**Product Name** PS, PSH, PSG, PHR, PG, PDC and DCG Valve Regulated (VRLA) Batteries Absorbed Electrolyte (AGM)

**Other means of identification**

**SDS #** POWER-001

**Recommended use of the chemical and restrictions on use**

**Recommended Use** Battery

**Details of the supplier of the safety data sheet**

**Manufacturer Address**
Power-Sonic Corporation
7550 Panasonic Way
San Diego, CA 92154

**Emergency Telephone Number**

**Company Phone Number** 1-619-661-2020

**Emergency Telephone (24 hr)** INFOTRAC 1-800-535-5053 (domestic), 1-352-323-3500 (International)

## 2. HAZARDS IDENTIFICATION

**EMERGENCY OVERVIEW:** This product is a nonspillable lead acid battery. The information below is intended for repeated and prolonged contact with the battery contents in an occupational setting. In the absence of an incident or accident, is not likely to apply to normal product use. However, this Safety Data Sheet (SDS) contains valuable information critical to the safe handling and proper use of this product. This SDS should be retained and available for employees and other users of this product. Always be aware of the risk of fire, explosion, or burns. Do not short circuit the (+) and (-) terminals with any other metals. Do not disassemble or modify the battery. Do not solder a battery directly. Keep away from fire or open flame.

**Appearance** Battery **Physical State** Solid containing liquid **Odor** Characteristic

**Classification**

This product is a battery. The classification below is based on the battery acid contained in the battery, which would only be released during an incident.

| | |
|---|---|
| Acute toxicity - Oral | Category 4 |
| Acute toxicity - Inhalation (Dusts/Mists) | Category 4 |
| Skin corrosion/irritation | Category 1 Sub-category B |
| Serious eye damage/eye irritation | Category 1 |
| Reproductive toxicity | Category 1A |
| Specific target organ toxicity (repeated exposure) | Category 2 |

**Signal Word**
**Danger**

**Hazard Statements**
Harmful if swallowed
Harmful if inhaled
Causes severe skin burns and eye damage
May damage fertility or the unborn child
May cause damage to organs through prolonged or repeated exposure

**Precautionary Statements - Prevention**
Obtain special instructions before use
Do not handle until all safety precautions have been read and understood
Use personal protective equipment as required
Wash face, hands and any exposed skin thoroughly after handling
Do not eat, drink or smoke when using this product
Use only outdoors or in a well-ventilated area
Do not breathe dust/fume/gas/mist/vapors/spray

**Precautionary Statements - Response**
Immediately call a POISON CENTER or doctor/physician for all exposures
IF IN EYES: Rinse cautiously with water for several minutes. Remove contact lenses, if present and easy to do. Continue rinsing
IF ON SKIN (or hair): Remove/Take off immediately all contaminated clothing. Rinse skin with water/shower
Wash contaminated clothing before reuse
IF INHALED: Remove victim to fresh air and keep at rest in a position comfortable for breathing
IF SWALLOWED: Rinse mouth. Do NOT induce vomiting

**Precautionary Statements - Storage**
Store locked up

**Precautionary Statements - Disposal**
Dispose of contents/container to an approved waste disposal plant

**Other Hazards**
Very toxic to aquatic life with long lasting effects

## 3. COMPOSITION/INFORMATION ON INGREDIENTS

| Chemical Name | CAS No | Weight-% |
|---|---|---|
| Lead | 7439-92-1 | 65-75 |
| Sulfuric Acid | 7664-93-9 | 14-20 |
| Tin | 7440-31-5 | <.5 |
| Calcium | 7440-70-2 | <.1 |
| Fiberglass Separator | Proprietary | 5 |
| Case material: Acrylonitrile Butadine Styrene (ABS) | Proprietary | 5-10 |

**If Chemical Name/CAS No is "proprietary" and/or Weight-% is listed as a range, the specific chemical identity and/or percentage of composition has been withheld as a trade secret.** Inorganic lead and electrolyte (sulfuric acid) are the main components of every Valve Regulated Lead Acid battery supplied by Power-Sonic Corporation. Other ingredients may be present dependent upon the specific battery type. For additional information contact Power-Sonic Corporation Technical Department.

## 4. FIRST-AID MEASURES

**First Aid Measures**

**General Advice** Immediately call a poison center or doctor/physician. Provide this SDS to medical personnel for treatment.

**Eye Contact** IF IN EYES: Rinse cautiously with water for several minutes. Remove contact lenses, if present and easy to do. Continue rinsing.

**Skin Contact** IF ON SKIN (or hair): Remove/Take off immediately all contaminated clothing. Rinse skin with water/shower. Wash contaminated clothing before reuse.

**Inhalation** IF INHALED: Remove victim to fresh air and keep at rest in a position comfortable for breathing.

**Ingestion** IF SWALLOWED: Rinse mouth. Do NOT induce vomiting.

**Most important symptoms and effects**

**Symptoms** Harmful if swallowed. Harmful if inhaled. Causes severe skin burns and eye damage. May damage fertility or the unborn child. May cause damage to organs through prolonged or repeated exposure.

**Indication of any immediate medical attention and special treatment needed**

**Notes to Physician** Treat symptomatically.

## 5. FIRE-FIGHTING MEASURES

**Suitable Extinguishing Media**
Use extinguishing measures that are appropriate to local circumstances and the surrounding environment.

**Unsuitable Extinguishing Media** Not determined.

**Specific Hazards Arising from the Chemical**
Not determined.

**Hazardous Combustion Products** Sulfuric acid: Sulfur trioxide, carbon monoxide, sulfuric acid mist, sulfur dioxide, and hydrogen sulfide.
Lead Compounds: High temperatures above the melting point are likely to produce toxic metal fume, vapor, or dust; contact with strong acid or base or presence of nascent hydrogen may generate highly toxic arsine gas.

**Protective equipment and precautions for firefighters**
As in any fire, wear self-contained breathing apparatus pressure-demand, MSHA/NIOSH (approved or equivalent) and full protective gear.

## 6. ACCIDENTAL RELEASE MEASURES

**Personal precautions, protective equipment and emergency procedures**

**Personal Precautions** Use personal protective equipment as required.

**Methods and material for containment and cleaning up**

**Methods for Containment** There is no release of material unless the case is damaged or battery is misused/overcharged. If release occurs stop flow of material, contain/absorb all spills with dry sand, earth, or vermiculite. Do not use combustible materials. Neutralize spilled material with soda ash, sodium bicarbonate, lime, etc. Wear acid-resistant clothing, boots, gloves, and face shield. Dispose of as hazardous waste. Do not discharge acid to sewer.

**Methods for Clean-Up** Spent Batteries - send to secondary lead smelter for recycling. Follow applicable federal, state and local regulations Neutralize as in preceding step. Collect neutralized material in sealed container and handle as hazardous waste as applicable. A copy of this SDS must be supplied to any scrap dealer or secondary lead smelter with the battery.

## 7. HANDLING AND STORAGE

**Precautions for safe handling**

**Advice on Safe Handling** Handle in accordance with good industrial hygiene and safety practice. Obtain special instructions before use. Do not handle until all safety precautions have been read and understood. Use personal protective equipment as required. Wash face, hands, and any exposed skin thoroughly after handling. Do not eat, drink or smoke when using this product. Use only outdoors or in a well-ventilated area. Do not breathe dust/fume/gas/mist/vapors/spray. Due to the battery's low internal resistance and high power density, high levels of short circuit current can be developed across the battery terminals. Do not rest tools or cables on the battery. Use insulated tools only. Follow all installation instructions and diagrams when installing or maintaining battery systems.

**Conditions for safe storage, including any incompatibilities**

**Storage Conditions** Store batteries in a cool, dry, well ventilated area that are separated from incompatible materials and any activities which may generate flames, sparks, or heat. Keep clear of all metallic articles that could contact the negative and positive terminals on a battery and create a short circuit condition.

**Incompatible Materials** Sulfuric acid: Contact with combustibles and organic materials may cause fire and explosion. Also reacts violently with strong reducing agents, metals, sulfur trioxide gas, strong oxidizers, and water. Contact with metals may product toxic sulfur dioxide fumes and may release flammable hydrogen gas.
Lead Compounds: Avoid contact with strong acids, bases, halides, halogenates, potassium nitrate, permanganate, peroxides, nascent hydrogen, and reducing agents.

## 8. EXPOSURE CONTROLS/PERSONAL PROTECTION

**Exposure Guidelines**

| Chemical Name | ACGIH TLV | OSHA PEL | NIOSH IDLH |
|---|---|---|---|
| Lead<br>7439-92-1 | TWA: 0.05 mg/m$^3$ Pb | TWA: 50 µg/m$^3$ Pb | IDLH: 100 mg/m$^3$ Pb<br>TWA: 0.050 mg/m$^3$ Pb |
| Sulfuric Acid<br>7664-93-9 | TWA: 0.2 mg/m$^3$ thoracic fraction | TWA: 1 mg/m$^3$<br>(vacated) TWA: 1 mg/m$^3$ | IDLH: 15 mg/m$^3$<br>TWA: 1 mg/m$^3$ |
| Tin<br>7440-31-5 | TWA: 2 mg/m$^3$ Sn except Tin hydride | TWA: 2 mg/m$^3$ Sn except oxides<br>(vacated) TWA: 2 mg/m$^3$ Sn except oxides | IDLH: 100 mg/m$^3$ Sn<br>TWA: 2 mg/m$^3$ except Tin oxides Sn |

**Appropriate engineering controls**

**Engineering Controls** Store and handle batteries in a well ventilated area. If mechanical ventilation is used, components must be acid resistant.

**Individual protection measures, such as personal protective equipment**

**Eye/Face Protection** None needed under normal conditions. If handling damaged or broken batteries use chemical splash goggles or face shield.

| | |
|---|---|
| **Skin and Body Protection** | None needed under normal conditions. If battery case is damaged use rubber or plastic elbow length gauntlets. In case of damaged or broken battery use an acid resistant apron. Under severe exposure or emergency conditions wear acid resistant clothing. |
| **Respiratory Protection** | None required under normal conditions. If battery is overcharged and concentrations of sulfuric acid are known to exceed PEL use NIOSH or MSH approved respiratory protection. |
| **General Hygiene Considerations** | Handle batteries carefully to avoid damaging the case. Do not allow metallic articles to contact the battery terminals during handling. Avoid contact with the internal components of the battery. |

## 9. PHYSICAL AND CHEMICAL PROPERTIES

**Information on basic physical and chemical properties**

| | | | |
|---|---|---|---|
| **Physical State** | Solid containing liquid | | |
| **Appearance** | Battery | **Odor** | Characteristic |
| **Color** | Not determined | **Odor Threshold** | Not determined |

| **Property** | **This product is a battery and typical physical/chemical properties do not apply.** | **Remarks • Method** |
|---|---|---|
| **pH** | Not determined | |
| **Melting Point/Freezing Point** | Not determined | |
| **Boiling Point/Boiling Range** | Not determined | |
| **Flash Point** | Not determined | |
| **Evaporation Rate** | Not determined | |
| **Flammability (Solid, Gas)** | Not determined | |
| **Upper Flammability Limits** | Not determined | |
| **Lower Flammability Limit** | Not determined | |
| **Vapor Pressure** | Not determined | |
| **Vapor Density** | Not determined | |
| **Specific Gravity** | 1.3 | |
| **Water Solubility** | Not determined | |
| **Solubility in other solvents** | Not determined | |
| **Partition Coefficient** | Not determined | |
| **Auto-ignition Temperature** | Not determined | |
| **Decomposition Temperature** | Not determined | |
| **Kinematic Viscosity** | Not determined | |
| **Dynamic Viscosity** | Not determined | |
| **Explosive Properties** | Not determined | |
| **Oxidizing Properties** | Not determined | |

## 10. STABILITY AND REACTIVITY

**Reactivity**
Not reactive under normal conditions.

**Chemical Stability**
Stable under recommended storage conditions.

**Possibility of Hazardous Reactions**
None under normal processing.

**Hazardous Polymerization** Hazardous polymerization does not occur.

**Conditions to Avoid**
Keep out of reach of children.

**Incompatible Materials**

Sulfuric acid: Contact with combustibles and organic materials may cause fire and explosion. Also reacts violently with strong reducing agents, metals, sulfur trioxide gas, strong oxidizers, and water. Contact with metals may product toxic sulfur dioxide fumes and may release flammable hydrogen gas.
Lead Compounds: Avoid contact with strong acids, bases, halides, halogenates, potassium nitrate, permanganate, peroxides, nascent hydrogen, and reducing agents.

**Hazardous Decomposition Products**

Sulfuric acid: Sulfur trioxide, carbon monoxide, sulfuric acid mist, sulfur dioxide, and hydrogen sulfide.
Lead Compounds: High temperatures above the melting point are likely to produce toxic metal fume, vapor, or dust; contact with strong acid or base or presence of nascent hydrogen may generate highly toxic arsine gas.

## 11. TOXICOLOGICAL INFORMATION

**Information on likely routes of exposure**

**Product Information**

**Eye Contact** Causes severe eye damage.

**Skin Contact** Causes severe skin burns.

**Inhalation** Harmful by inhalation.

**Ingestion** Harmful if swallowed.

**Component Information**

| Chemical Name | Oral LD50 | Dermal LD50 | Inhalation LC50 |
|---|---|---|---|
| Sulfuric Acid<br>7664-93-9 | = 2140 mg/kg ( Rat ) | - | = 510 mg/m$^3$ ( Rat ) 2 h |
| Tin<br>7440-31-5 | = 700 mg/kg ( Rat ) | - | - |

**Information on physical, chemical and toxicological effects**

**Symptoms** Please see section 4 of this SDS for symptoms.

**Delayed and immediate effects as well as chronic effects from short and long-term exposure**

**Carcinogenicity** The table below indicates whether each agency has listed any ingredient as a carcinogen. However, the product as a whole has not been tested. IARC has classified "strong inorganic acid mist containing sulfuric acid" as a category 1 carcinogen, substance that is carcinogenic to humans. This classification does not apply to liquid forms of sulfuric acid or sulfuric acid solutions contained within a battery. Inorganic acid mist is not generated under normal use of this product. Misuse of the product, such as overcharging, may result in the generation of sulfuric acid mist. Hazardous exposure to lead can occur only when product is heated, oxidized, or otherwise processed or damaged to create dust, vapor or fume.

| Chemical Name | ACGIH | IARC | NTP | OSHA |
|---|---|---|---|---|
| Lead<br>7439-92-1 | A3 | Group 2A | Reasonably Anticipated | X |
| Sulfuric Acid<br>7664-93-9 | A2 | Group 1 | Known | X |

**Legend**

***ACGIH (American Conference of Governmental Industrial Hygienists)***
*A2 - Suspected Human Carcinogen*
*A3 - Animal Carcinogen*
***IARC (International Agency for Research on Cancer)***
*Group 1 - Carcinogenic to Humans*
*Group 2A - Probably Carcinogenic to Humans*

***NTP (National Toxicology Program)***
*Known - Known Carcinogen*
*Reasonably Anticipated - Reasonably Anticipated to be a Human Carcinogen*
***OSHA (Occupational Safety and Health Administration of the US Department of Labor)***
*X - Present*

**Reproductive toxicity** May damage fertility or the unborn child.

**STOT - repeated exposure** Causes damage to organs through prolonged or repeated exposure.

**Numerical measures of toxicity**
Not determined

## 12. ECOLOGICAL INFORMATION

**Ecotoxicity**
Very toxic to aquatic life with long lasting effects.

| Chemical Name | Algae/aquatic plants | Fish | Toxicity to microorganisms | Crustacea |
|---|---|---|---|---|
| Lead<br>7439-92-1 | | 0.44: 96 h Cyprinus carpio mg/L LC50 semi-static 1.17: 96 h Oncorhynchus mykiss mg/L LC50 flow-through 1.32: 96 h Oncorhynchus mykiss mg/L LC50 static | | 600: 48 h water flea µg/L EC50 |
| Sulfuric Acid<br>7664-93-9 | | 500: 96 h Brachydanio rerio mg/L LC50 static | | 29: 24 h Daphnia magna mg/L EC50 |

**Persistence/Degradability**
Not determined.

**Bioaccumulation**
Not determined.

**Mobility**
Not determined

**Other Adverse Effects**
Not determined

## 13. DISPOSAL CONSIDERATIONS

**Waste Treatment Methods**

**Disposal of Wastes** Spent Batteries - send to secondary lead smelter for recycling. Follow applicable federal, state and local regulations Neutralize as in preceding step. Collect neutralized material in sealed container and handle as hazardous waste as applicable. A copy of this SDS must be supplied to any scrap dealer or secondary lead smelter with the battery.

**Contaminated Packaging** Disposal should be in accordance with applicable regional, national and local laws and regulations.

| Chemical Name | RCRA | RCRA - Basis for Listing | RCRA - D Series Wastes | RCRA - U Series Wastes |
|---|---|---|---|---|
| Lead<br>7439-92-1 | | Included in waste streams: F035, F037, F038, F039, K002, K003, K005, K046, K048, K049, K051, K052, K061, K062, K069, K086, K100, K176 | 5.0 mg/L regulatory level | |

**California Hazardous Waste Status** This product contains one or more substances that are listed with the State of California as a hazardous waste

| Chemical Name | California Hazardous Waste Status |
|---|---|
| Lead<br>7439-92-1 | Toxic |
| Sulfuric Acid<br>7664-93-9 | Toxic<br>Corrosive |

## 14. TRANSPORT INFORMATION

**Note**

Powersonic's nonspillable lead acid batteries are regulated as Class 8 Corrosive hazardous materials / dangerous goods by the U.S. Department of Transportation (DOT) and international dangerous goods regulations referenced below (i.e., IATA Dangerous Goods Regulations and IMDG Code). However, Powersonic's nonspillable batteries are excepted from these regulations because the batteries meet all of the testing, packaging and marking requirements found in the U.S. and international dangerous goods regulations. Therefore, the batteries do not need to be shipped and transported as fully-regulated Class 8 Corrosive hazardous materials / dangerous goods when packaged in accordance with these regulations.

**UN Number**

2800

**DOT**

49 CFR 173.159(f) and 49 CFR 173.159a

The batteries have been tested in accordance with the vibration and pressure differential tests found in 49 CFR 173.159(f) and "crack test" found at 49 CFR 173.159a;
When offered for transport, the batteries must be protected against short circuits and securely packaged in accordance with 49 CFR 173.159a; and
The batteries and outer packaging must be marked NONSPILLABLE BATTERY as required by 49 CFR 173.159a.

**IATA**

Packing Instruction 872 and Special Provision A67

The batteries have been tested in accordance with the vibration and pressure differential tests found in Packing Instruction 872 and "crack test" found in Special Provision A67 of the International Air Transport Association (IATA) Dangerous Goods Regulations
When offered for transport, the batteries must be protected against short circuits and securely packaged in accordance with Special Provision A67.

**IMDG**

Special Provision 238.1 and 238.2

The batteries have been tested in accordance with the vibration and pressure differential tests and "crack test" found in Special Provision 238.1 and 238.2.
When offered for transport, the batteries must be protected against short circuits and securely packaged in accordance with Special Provision 238.1 and 238.2.

## 15. REGULATORY INFORMATION

**International Inventories**

| Chemical Name | TSCA | DSL | NDSL | EINECS | ELINCS | ENCS | IECSC | KECL | PICCS | AICS |
|---|---|---|---|---|---|---|---|---|---|---|
| Lead | Present | X | | Present | | Present | X | Present | X | X |
| Sulfuric Acid | Present | X | | Present | | Present | X | Present | X | X |
| Tin | Present | X | | Present | | | X | Present | X | X |
| Calcium | Present | X | | Present | | | X | Present | X | X |

**Legend:**

***TSCA*** *- United States Toxic Substances Control Act Section 8(b) Inventory*

***DSL/NDSL*** *- Canadian Domestic Substances List/Non-Domestic Substances List*

***EINECS/ELINCS*** *- European Inventory of Existing Chemical Substances/European List of Notified Chemical Substances*

***ENCS*** *- Japan Existing and New Chemical Substances*

***IECSC*** *- China Inventory of Existing Chemical Substances*

***KECL*** *- Korean Existing and Evaluated Chemical Substances*

***PICCS*** *- Philippines Inventory of Chemicals and Chemical Substances*

***AICS*** *- Australian Inventory of Chemical Substances*

## US Federal Regulations

### CERCLA

| Chemical Name | Hazardous Substances RQs | CERCLA/SARA RQ | Reportable Quantity (RQ) |
|---|---|---|---|
| Lead<br>7439-92-1 | 10 lb | | RQ 10 lb final RQ<br>RQ 4.54 kg final RQ |
| Sulfuric Acid<br>7664-93-9 | 1000 lb | 1000 lb | RQ 1000 lb final RQ<br>RQ 454 kg final RQ |

### SARA 313

Section 313 of Title III of the Superfund Amendments and Reauthorization Act of 1986 (SARA). This product contains a chemical or chemicals which are subject to the reporting requirements of the Act and Title 40 of the Code of Federal Regulations, Part 372

| Chemical Name | CAS No | Weight-% | SARA 313 - Threshold Values % |
|---|---|---|---|
| Lead - 7439-92-1 | 7439-92-1 | 65-75 | 0.1 |
| Sulfuric Acid - 7664-93-9 | 7664-93-9 | 14-20 | 1.0 |

### CWA (Clean Water Act)

| Chemical Name | CWA - Reportable Quantities | CWA - Toxic Pollutants | CWA - Priority Pollutants | CWA - Hazardous Substances |
|---|---|---|---|---|
| Lead | | X | X | |
| Sulfuric Acid | 1000 lb | | | X |

## US State Regulations

### California Proposition 65

This product contains the following Proposition 65 chemicals.

| Chemical Name | California Proposition 65 |
|---|---|
| Lead - 7439-92-1 | Carcinogen<br>Developmental<br>Female Reproductive<br>Male Reproductive |
| Sulfuric Acid - 7664-93-9 | Carcinogen |

### U.S. State Right-to-Know Regulations

| Chemical Name | New Jersey | Massachusetts | Pennsylvania |
|---|---|---|---|
| Lead<br>7439-92-1 | X | X | X |
| Sulfuric Acid<br>7664-93-9 | X | X | X |
| Tin<br>7440-31-5 | X | X | X |
| Calcium<br>7440-70-2 | X | X | X |

## 16. OTHER INFORMATION

| | | | | |
|---|---|---|---|---|
| **NFPA** | **Health Hazards** | **Flammability** | **Instability** | **Special Hazards** |
| | 3 | 0 | 2 | - |
| **HMIS** | **Health Hazards** | **Flammability** | **Physical Hazards** | **Personal Protection** |
| | Not determined | Not determined | Not determined | Not determined |

**Issue Date:** 01-Jan-2014
**Revision Date:** 07-August-2020
**Revision Note:** 2020 update

**Disclaimer**
**The information provided in this Safety Data Sheet is correct to the best of our knowledge, information and belief at the date of its publication. The information given is designed only as a guidance for safe handling, use, processing, storage, transportation, disposal and release and is not to be considered a warranty or quality specification. The information relates only to the specific material designated and may not be valid for such material used in combination with any other materials or in any process, unless specified in the text.**

**End of Safety Data Sheet**

Rev.1.4

# Univar USA Inc Safety Data Sheet

| | |
|---|---|
| SDS No: | |
| Version No: | 006 2015-10-29 |
| Order No: | |

3075 Highland Pkwy, Ste 200, Downers Grove, IL 60515
(425) 889 3400

Emergency Assistance

For emergency assistance involving chemicals call
Chemtrec - (800) 424-9300

# SAFETY DATA SHEET

Drakeol® 35 MIN OIL USP

## Section 1. Identification

**GHS product identifier** : Drakeol® 35 MIN OIL USP

**Product code** : PEN1440-02-C

**Chemical name** : White mineral oil (petroleum)

**Other means of identification** : White mineral oil, petroleum; White spirits; White mineral oil; Mineral oil; Paraffin oil; Paraffinum liquidum

**Product type** : Liquid.

**Relevant identified uses of the substance or mixture and uses advised against**

| Identified uses |
|---|
| Petrochemical industry: Petroleum refining. Mineral oil. |

| Uses advised against | Reason |
|---|---|
| Not available. | |

**Supplier's details** : Calumet Specialty Products Partners, L.P.
2780 Waterfront Pkwy E. Dr.
Suite 200
Indianapolis, Indiana 46214 USA
Technical Services: 317-328-5660

**Emergency telephone number (with hours of operation)** : 24 hr. CHEMTREC 1-800-424-9300 / International 1-703-527-3887

## Section 2. Hazards identification

**OSHA/HCS status** : While this material is not considered hazardous by the OSHA Hazard Communication Standard (29 CFR 1910.1200), this SDS contains valuable information critical to the safe handling and proper use of the product. This SDS should be retained and available for employees and other users of this product.

**Classification of the substance or mixture** : Not classified.

**GHS label elements**

**Signal word** : No signal word.

**Hazard statements** : No known significant effects or critical hazards.

**Precautionary statements**

**Prevention** : Not applicable.

**Response** : Not applicable.

**Storage** : Not applicable.

**Disposal** : Not applicable.

**Hazards not otherwise classified** : None known.

*Drakeol® 35 MIN OIL USP*

## Section 3. Composition/information on ingredients

**Substance/mixture** : Substance

**Chemical name** : White mineral oil (petroleum)

**Other means of identification** : White mineral oil, petroleum; White spirits; White mineral oil; Mineral oil; Paraffin oil; Paraffinum liquidum

**CAS number/other identifiers**

**CAS number** : 8042-47-5

| Ingredient name | % | CAS number |
|---|---|---|
| White mineral oil (petroleum) | 100 | 8042-47-5 |

Any concentration shown as a range is to protect confidentiality or is due to batch variation.

**There are no additional ingredients present which, within the current knowledge of the supplier and in the concentrations applicable, are classified as hazardous to health or the environment and hence require reporting in this section.**

**Occupational exposure limits, if available, are listed in Section 8.**

## Section 4. First aid measures

**Description of necessary first aid measures**

**Eye contact** : Immediately flush eyes with plenty of water, occasionally lifting the upper and lower eyelids. Check for and remove any contact lenses. Get medical attention if irritation occurs.

**Inhalation** : Remove victim to fresh air and keep at rest in a position comfortable for breathing. Get medical attention if symptoms occur.

**Skin contact** : Flush contaminated skin with plenty of water. Remove contaminated clothing and shoes. Get medical attention if symptoms occur.

**Ingestion** : Wash out mouth with water. Remove victim to fresh air and keep at rest in a position comfortable for breathing. If material has been swallowed and the exposed person is conscious, give small quantities of water to drink. Do not induce vomiting unless directed to do so by medical personnel. Get medical attention if symptoms occur.

**Most important symptoms/effects, acute and delayed**

**Potential acute health effects**

**Eye contact** : No known significant effects or critical hazards.

**Inhalation** : No known significant effects or critical hazards.

**Skin contact** : No known significant effects or critical hazards.

**Ingestion** : No known significant effects or critical hazards.

**Over-exposure signs/symptoms**

**Eye contact** : No specific data.

**Inhalation** : No specific data.

**Skin contact** : No specific data.

**Ingestion** : No specific data.

**Indication of immediate medical attention and special treatment needed, if necessary**

**Notes to physician** : Treat symptomatically. Contact poison treatment specialist immediately if large quantities have been ingested or inhaled.

**Specific treatments** : No specific treatment.

**Protection of first-aiders** : No action shall be taken involving any personal risk or without suitable training.

*Drakeol® 35 MIN OIL USP*

## Section 4. First aid measures

**See toxicological information (Section 11)**

## Section 5. Fire-fighting measures

**Extinguishing media**

**Suitable extinguishing media** : Use an extinguishing agent suitable for the surrounding fire.

**Unsuitable extinguishing media** : Do not use water jet.

**Specific hazards arising from the chemical** : In a fire or if heated, a pressure increase will occur and the container may burst.

**Hazardous thermal decomposition products** : Decomposition products may include the following materials:
carbon dioxide
carbon monoxide

**Special protective actions for fire-fighters** : Promptly isolate the scene by removing all persons from the vicinity of the incident if there is a fire. No action shall be taken involving any personal risk or without suitable training.

**Special protective equipment for fire-fighters** : Fire-fighters should wear appropriate protective equipment and self-contained breathing apparatus (SCBA) with a full face-piece operated in positive pressure mode.

## Section 6. Accidental release measures

**Personal precautions, protective equipment and emergency procedures**

**For non-emergency personnel** : No action shall be taken involving any personal risk or without suitable training. Evacuate surrounding areas. Keep unnecessary and unprotected personnel from entering. Do not touch or walk through spilled material. Put on appropriate personal protective equipment.

**For emergency responders** : If specialised clothing is required to deal with the spillage, take note of any information in Section 8 on suitable and unsuitable materials. See also the information in "For non-emergency personnel".

**Environmental precautions** : Avoid dispersal of spilled material and runoff and contact with soil, waterways, drains and sewers. Inform the relevant authorities if the product has caused environmental pollution (sewers, waterways, soil or air).

**Methods and materials for containment and cleaning up**

**Small spill** : Stop leak if without risk. Move containers from spill area. Dilute with water and mop up if water-soluble. Alternatively, or if water-insoluble, absorb with an inert dry material and place in an appropriate waste disposal container. Dispose of via a licensed waste disposal contractor.

**Large spill** : Stop leak if without risk. Move containers from spill area. Prevent entry into sewers, water courses, basements or confined areas. Wash spillages into an effluent treatment plant or proceed as follows. Contain and collect spillage with non-combustible, absorbent material e.g. sand, earth, vermiculite or diatomaceous earth and place in container for disposal according to local regulations (see Section 13). Dispose of via a licensed waste disposal contractor. Note: see Section 1 for emergency contact information and Section 13 for waste disposal.

*Drakeol® 35 MIN OIL USP*

## Section 7. Handling and storage

### Precautions for safe handling

**Protective measures** : Put on appropriate personal protective equipment (see Section 8).

**Advice on general occupational hygiene** : Eating, drinking and smoking should be prohibited in areas where this material is handled, stored and processed. Workers should wash hands and face before eating, drinking and smoking. Remove contaminated clothing and protective equipment before entering eating areas. See also Section 8 for additional information on hygiene measures.

**Conditions for safe storage, including any incompatibilities** : Store in accordance with local regulations. Store in original container protected from direct sunlight in a dry, cool and well-ventilated area, away from incompatible materials (see Section 10) and food and drink. Keep container tightly closed and sealed until ready for use. Containers that have been opened must be carefully resealed and kept upright to prevent leakage. Do not store in unlabeled containers. Use appropriate containment to avoid environmental contamination.

## Section 8. Exposure controls/personal protection

### Control parameters

#### Occupational exposure limits

| Ingredient name | Exposure limits |
|---|---|
| White mineral oil (petroleum) | **ACGIH TLV (United States, 4/2014).**<br>TWA: 5 mg/m³ 8 hours. Form: Inhalable fraction<br>**NIOSH REL (United States, 10/2013).**<br>TWA: 5 mg/m³ 10 hours. Form: Mist<br>STEL: 10 mg/m³ 15 minutes. Form: Mist<br>**OSHA PEL (United States, 2/2013).**<br>TWA: 5 mg/m³ 8 hours. |

**Appropriate engineering controls** : Good general ventilation should be sufficient to control worker exposure to airborne contaminants.

**Environmental exposure controls** : Emissions from ventilation or work process equipment should be checked to ensure they comply with the requirements of environmental protection legislation. In some cases, fume scrubbers, filters or engineering modifications to the process equipment will be necessary to reduce emissions to acceptable levels.

### Individual protection measures

**Hygiene measures** : Wash hands, forearms and face thoroughly after handling chemical products, before eating, smoking and using the lavatory and at the end of the working period. Appropriate techniques should be used to remove potentially contaminated clothing. Wash contaminated clothing before reusing. Ensure that eyewash stations and safety showers are close to the workstation location.

**Eye/face protection** : Safety eyewear complying with an approved standard should be used when a risk assessment indicates this is necessary to avoid exposure to liquid splashes, mists, gases or dusts. If contact is possible, the following protection should be worn, unless the assessment indicates a higher degree of protection: safety glasses with side-shields.

#### Skin protection

**Hand protection** : Chemical-resistant, impervious gloves complying with an approved standard should be worn at all times when handling chemical products if a risk assessment indicates this is necessary.

*Drakeol® 35 MIN OIL USP*

## Section 8. Exposure controls/personal protection

**Body protection** : Personal protective equipment for the body should be selected based on the task being performed and the risks involved and should be approved by a specialist before handling this product.

**Other skin protection** : Appropriate footwear and any additional skin protection measures should be selected based on the task being performed and the risks involved and should be approved by a specialist before handling this product.

**Respiratory protection** : Use a properly fitted, air-purifying or air-fed respirator complying with an approved standard if a risk assessment indicates this is necessary. Respirator selection must be based on known or anticipated exposure levels, the hazards of the product and the safe working limits of the selected respirator.

## Section 9. Physical and chemical properties

**Appearance**

**Physical state** : Liquid. [Viscous liquid.]

**Color** : Colorless.

**Odor** : Mild. Hydrocarbon.

**Odor threshold** : Not available.

**pH** : Not available.

**Melting point** : -60 to -9°C (-76 to 15.8°F)

**Boiling point** : 218 to 800°C (424.4 to 1472°F)

**Flash point** : Closed cup: >112°C (>233.6°F)
Open cup: 223.33°C (434°F) [Cleveland.]

**Evaporation rate** : Not available.

**Flammability (solid, gas)** : Not available.

**Lower and upper explosive (flammable) limits** : Not available.

**Vapor pressure** : 0.011 kPa (0.08 mm Hg) [room temperature]

**Vapor density** : Not available.

**Relative density** : 0.869

**Solubility** : Insoluble in the following materials: cold water and hot water.

**Partition coefficient: n-octanol/water** : >6

**Auto-ignition temperature** : 325 to 355°C (617 to 671°F)

**Decomposition temperature** : Not available.

**Viscosity** : Kinematic (40°C (104°F)): 0.68 $cm^2/s$ (68 cSt)

## Section 10. Stability and reactivity

**Reactivity** : No specific test data related to reactivity available for this product or its ingredients.

**Chemical stability** : The product is stable.

**Possibility of hazardous reactions** : Under normal conditions of storage and use, hazardous reactions will not occur.

**Conditions to avoid** : No specific data.

**Incompatible materials** : No specific data.

*Drakeol® 35 MIN OIL USP*

## Section 10. Stability and reactivity

**Hazardous decomposition products** : Under normal conditions of storage and use, hazardous decomposition products should not be produced.

## Section 11. Toxicological information

### Information on toxicological effects

#### Acute toxicity

| Product/ingredient name | Result | Species | Dose | Exposure |
|---|---|---|---|---|
| White mineral oil (petroleum) | LC50 Inhalation Dusts and mists<br>LD50 Dermal<br>LD50 Oral | Rat<br>Rabbit<br>Rat | >5 mg/l<br>>2000 mg/kg<br>>5000 mg/kg | 4 hours<br>-<br>- |

#### Irritation/Corrosion

Not available.

#### Sensitization

Not available.

#### Mutagenicity

Not available.

#### Carcinogenicity

Not available.

**Conclusion/Summary** : The classification as a carcinogen need not apply as it can be shown that the substance contains less than 3 % DMSO extract as measured by IP 346.

#### Reproductive toxicity

Not available.

#### Teratogenicity

Not available.

#### Specific target organ toxicity (single exposure)

Not available.

#### Specific target organ toxicity (repeated exposure)

Not available.

#### Aspiration hazard

Not available.

**Information on the likely routes of exposure** : Routes of entry anticipated: Oral, Dermal, Inhalation.

### Potential acute health effects

**Eye contact** : No known significant effects or critical hazards.

**Inhalation** : No known significant effects or critical hazards.

**Skin contact** : No known significant effects or critical hazards.

**Ingestion** : No known significant effects or critical hazards.

### Symptoms related to the physical, chemical and toxicological characteristics

**Eye contact** : No specific data.

**Inhalation** : No specific data.

**Skin contact** : No specific data.

*Drakeol® 35 MIN OIL USP*

## Section 11. Toxicological information

**Ingestion** : No specific data.

**Delayed and immediate effects and also chronic effects from short and long term exposure**

**Short term exposure**

**Potential immediate effects** : Not available.

**Potential delayed effects** : Not available.

**Long term exposure**

**Potential immediate effects** : Not available.

**Potential delayed effects** : Not available.

**Potential chronic health effects**

Not available.

**General** : No known significant effects or critical hazards.

**Carcinogenicity** : No known significant effects or critical hazards.

**Mutagenicity** : No known significant effects or critical hazards.

**Teratogenicity** : No known significant effects or critical hazards.

**Developmental effects** : No known significant effects or critical hazards.

**Fertility effects** : No known significant effects or critical hazards.

**Numerical measures of toxicity**

**Acute toxicity estimates**

Not available.

## Section 12. Ecological information

**Toxicity**

| Product/ingredient name | Result | Species | Exposure |
|---|---|---|---|
| White mineral oil (petroleum) | Acute LC50 >100 mg/l<br>Acute LC50 >10000 mg/l | Daphnia<br>Fish | 48 hours<br>96 hours |

**Persistence and degradability**

| Product/ingredient name | Aquatic half-life | Photolysis | Biodegradability |
|---|---|---|---|
| White mineral oil (petroleum) | - | - | Inherent |

**Bioaccumulative potential**

| Product/ingredient name | $LogP_{ow}$ | BCF | Potential |
|---|---|---|---|
| White mineral oil (petroleum) | >6 | - | high |

**Mobility in soil**

**Soil/water partition coefficient ($K_{OC}$)** : Not available.

*Drakeol® 35 MIN OIL USP*

## Section 12. Ecological information

**Other adverse effects** : No known significant effects or critical hazards.

## Section 13. Disposal considerations

**Disposal methods** : The generation of waste should be avoided or minimized wherever possible. Disposal of this product, solutions and any by-products should at all times comply with the requirements of environmental protection and waste disposal legislation and any regional local authority requirements. Dispose of surplus and non-recyclable products via a licensed waste disposal contractor. Waste should not be disposed of untreated to the sewer unless fully compliant with the requirements of all authorities with jurisdiction. Waste packaging should be recycled. Incineration or landfill should only be considered when recycling is not feasible. This material and its container must be disposed of in a safe way. Empty containers or liners may retain some product residues. Avoid dispersal of spilled material and runoff and contact with soil, waterways, drains and sewers.

**RCRA classification** : Not Regulated

## Section 14. Transport information

| | DOT Classification | TDG Classification | IMDG | IATA |
|---|---|---|---|---|
| **UN number** | Not regulated. | Not regulated. | Not regulated. | Not regulated. |

**Special precautions for user** : **Transport within user's premises:** always transport in closed containers that are upright and secure. Ensure that persons transporting the product know what to do in the event of an accident or spillage.

**Transport in bulk according to Annex II of MARPOL 73/78 and the IBC Code** : Not available.

## Section 15. Regulatory information

**U.S. Federal regulations** : **TSCA 8(a) CDR Exempt/Partial exemption**: This material is listed or exempted.
This material is listed or exempted.

**Clean Air Act Section 112 (b) Hazardous Air Pollutants (HAPs)** : Not listed

**Clean Air Act Section 602 Class I Substances** : Not listed

**Clean Air Act Section 602 Class II Substances** : Not listed

**DEA List I Chemicals (Precursor Chemicals)** : Not listed

**DEA List II Chemicals (Essential Chemicals)** : Not listed

**SARA 302/304**

**Composition/information on ingredients**

No products were found.

**SARA 304 RQ** : Not applicable.

**SARA 311/312**

*Drakeol® 35 MIN OIL USP*

## Section 15. Regulatory information

**Classification** : Not applicable.

**Composition/information on ingredients**

| Name | % | Fire hazard | Sudden release of pressure | Reactive | Immediate (acute) health hazard | Delayed (chronic) health hazard |
|---|---|---|---|---|---|---|
| White mineral oil (petroleum) | 100 | No. | No. | No. | Yes. | No. |

**State regulations**

**Massachusetts** : This material is not listed.

**New York** : This material is not listed.

**New Jersey** : This material is listed.

**Pennsylvania** : This material is not listed.

**California Prop. 65**

This product is not known to contain any chemicals currently listed as carcinogens or reproductive toxins.

**International lists**

**National inventory**

**Australia** : This material is listed or exempted.

**Canada** : This material is listed or exempted.

**China** : This material is listed or exempted.

**Europe** : This material is listed or exempted.

**Japan** : This material is listed or exempted.

**Malaysia** : Not determined.

**New Zealand** : This material is listed or exempted.

**Philippines** : This material is listed or exempted.

**Republic of Korea** : This material is listed or exempted.

**Taiwan** : This material is listed or exempted.

## Section 16. Other information

**Procedure used to derive the classification**

| Classification | Justification |
|---|---|
| Not classified. | |

**History**

**Date of issue/Date of revision** : 06/11/2015

**Version** : 1.1

**Key to abbreviations** : ATE = Acute Toxicity Estimate
BCF = Bioconcentration Factor
GHS = Globally Harmonized System of Classification and Labelling of Chemicals
IATA = International Air Transport Association
IBC = Intermediate Bulk Container
IMDG = International Maritime Dangerous Goods
LogPow = logarithm of the octanol/water partition coefficient
MARPOL 73/78 = International Convention for the Prevention of Pollution From Ships, 1973 as modified by the Protocol of 1978. ("Marpol" = marine pollution)
UN = United Nations

**Indicates information that has changed from previously issued version.**

*Drakeol® 35 MIN OIL USP*

## Section 16. Other information

**Notice to reader**

**To the best of our knowledge, the information contained herein is accurate. However, neither the above-named supplier, nor any of its subsidiaries, assumes any liability whatsoever for the accuracy or completeness of the information contained herein.**
**Final determination of suitability of any material is the sole responsibility of the user. All materials may present unknown hazards and should be used with caution. Although certain hazards are described herein, we cannot guarantee that these are the only hazards that exist.**

# Univar USA Inc Safety Data Sheet

For Additional Information contact SDS Coordinator during business hours, Pacific time: (425) 889-3400

**Notice**

Univar USA Inc. (”Univar”) expressly disclaims all express or implied warranties of merchantability and fitness for a particular purpose, with respect to the product or information provided herein, and shall under no circumstances be liable for incidental or consequential damages.

Do not use ingredient information and/or ingredient percentages in this SDS as a product specification. For product specification information refer to a product specification sheet and/or a certificate of analysis. These can be obtained from your local Univar sales office.

All information appearing herein is based upon data obtained from the manufacturer and/or recognized technical sources. While the information is believed to be accurate, Univar makes no representations as to its accuracy or sufficiency. Conditions of use are beyond Univar's control and therefore users are responsible to verify this data under their own operating conditions to determine whether the product is suitable for their particular purposes and they assume all risks of their use, handling, and disposal of the product, or from the publication or use of, or reliance upon, information contained herein.

This information relates only to the product designated herein, and does not relate to its use in combination with any other material or in any other process

# Rotational Molding Polyethylene, Pellets or Powder

Version 2.0 Revision Date 2015-05-07

## SECTION 1: Identification of the substance/mixture and of the company/undertaking

### Product information

Product Name : Rotational Molding Polyethylene, Pellets or Powder
Material : 1108214, 1108225, 1086939, 1086953, 1086940, 1086954, 1086955, 1086938, 1102011, 1102012, 1102008, 1102009, 1102013, 1102010, 1102025, 1102024, 1102023, 1102022, 1086967, 1086966, 1086965, 1086962, 1086961, 1086960, 1103123, 1102187, 1101781, 1101780, 1101779, 1101778, 1101777, 1101776, 1101775, 1101774, 1101773, 1101772, 1101730, 1084755, 1084754, 1084753, 1084752, 1084751, 1084750, 1084749, 1084748, 1084747, 1084746, 1084745, 1084744, 1108042, 1103396, 1103395, 1101760, 1101759, 1101758, 1101757, 1101756, 1101755, 1101754, 1101753, 1101752, 1084913, 1084912, 1084911, 1084910, 1084909, 1084908, 1084907, 1084906, 1084905, 1084904, 1084903, 1084902, 1086979, 1086978, 1086977, 1086974, 1086973, 1086972, 1084777, 1084776, 1084775, 1084774, 1084773, 1084772, 1084761, 1084760, 1084759, 1084758, 1084757, 1084756, 1086991, 1086990, 1086989, 1086986, 1086985, 1086984, 1084789, 1084788, 1084787, 1084786, 1084785, 1084784, 1084783, 1084782, 1084781, 1084780, 1084779, 1084778

**Company** : Chevron Phillips Chemical Company LP
10001 Six Pines Drive
The Woodlands, TX 77380

**Emergency telephone:**

**Health**:
866.442.9628 (North America)
1.832.813.4984 (International)
**Transport**:
North America: CHEMTREC 800.424.9300 or 703.527.3887
Asia: +800 CHEMCALL (+800 2436 2255) China:+86-21-22157316
EUROPE: BIG +32.14.584545 (phone) or +32.14583516 (telefax)
South America SOS-Cotec Inside Brazil: 0800.111.767 Outside Brazil: +55.19.3467.1600

Responsible Department : Product Safety and Toxicology Group
E-mail address : SDS@CPChem.com
Website : www.CPChem.com

MEDICAL APPLICATION CAUTION: Do not use this material in medical applications involving permanent implantation in the human body or permanent contact with internal body fluids or tissues fluids or tissues.

Do not use this material in medical applications involving brief or temporary implantation in the human body or contact with internal body fluids or tissues unless the material has been provided directly from Chevron Phillips Chemical Company LP or its legal affiliates under an agreement which expressly acknowledges the contemplated use.

Chevron Phillips Chemical Company LP and its legal affiliates makes no representation, promise, express warranty or implied warranty concerning the suitability of this material for use in implantation in the human body or in contact with internal body fluids or tissues.

## SECTION 2: Hazards identification

### Classification of the substance or mixture

This product has been classified in accordance with the hazard communication standard 29 CFR 1910.1200; the SDS and labels contain all the information as required by the standard.

### Emergency Overview

Warning

**Form**: Pellets **Physical state**: Solid **Color**: Opaque **Odor**: Mild to no odor

OSHA Hazards : Combustible dust

### Classification

: Combustible dust

### Labeling

Signal Word : Warning

Hazard Statements : May form combustible dust concentrations in air.
While this product may not be a combustible dust as sold, further processing or handling may form combustible dust concentration in air.

### Potential Health Effects

Physical Hazards : Pellets may cause a slip hazard on hard surfaces.
Mechanical processing may form combustible dust concentrations in air and thermal processing at elevated temperatures may generate formaldehyde.

Inhalation : Repeated exposure to dust from this material may cause respiratory irritation.
Fumes generated during thermal processing may cause irritation of the upper respiratory tract.

Skin : Contact with the skin is not expected to cause prolonged or significant irritation.
Contact with the skin is not expected to cause an allergic response.
If this material is heated, thermal burns may result from contact.
Thermal burns may include pain or feeling of heat, discolorations, swelling, and blistering.

Eyes : Contact with the eyes may cause irritation due to the abrasive action.

Not expected to cause prolonged or significant eye irritation.
Thermal burns may result if heated material contacts eye.

Ingestion : Ingestion of this product is not a likely route of exposure.

**Carcinogenicity:**

**IARC** No ingredient of this product present at levels greater than or equal to 0.1% is identified as probable, possible or confirmed human carcinogen by IARC.

**NTP** No ingredient of this product present at levels greater than or equal to 0.1% is identified as a known or anticipated carcinogen by NTP.

**ACGIH** No ingredient of this product present at levels greater than or equal to 0.1% is identified as a carcinogen or potential carcinogen by ACGIH.

## SECTION 3: Composition/information on ingredients

Synonyms : Plastic
HMN TR-935
HMN TR-935G
HMN TR-938
HMN TR-938G
HMN TR-942
HMN TR-942G
HMN TR-945
HMN TR-945G
HMN TR-935-01

Molecular formula : Mixture

| Component | CAS-No. | Weight % |
|---|---|---|
| Polyethylene Hexene Copolymer | 25213-02-9 | 99 - 100 |

## SECTION 4: First aid measures

If inhaled : Move to fresh air in case of accidental inhalation of dust or fumes from overheating or combustion. If symptoms persist, call a physician.

In case of skin contact : If the molten material gets on skin, quickly cool in water. Seek immediate medical attention. Do not try to peel the solidified material from the skin or use solvents or thinners to dissolve it.

In case of eye contact : In the case of contact with eyes, rinse immediately with plenty of water and seek medical advice.

If swallowed : Do not induce vomiting without medical advice.

## SECTION 5: Firefighting measures

| | | |
|---|---|---|
| Flash point | : | No data available |
| Autoignition temperature | : | No data available |
| Suitable extinguishing media | : | Water. Water mist. Dry chemical. Carbon dioxide (CO2). Foam. If possible, water should be applied as a spray from a fogging nozzle since this is a surface burning material. The application of high velocity water will spread the burning surface layer. Avoid the use of straight streams that may create a dust cloud and the risk of a dust explosion. Use extinguishing measures that are appropriate to local circumstances and the surrounding environment. |
| Specific hazards during fire fighting | : | Risks of ignition followed by flame propagation or secondary explosions can be caused by the accumulation of dust, e.g. on floors and ledges. |
| Special protective equipment for fire-fighters | : | Use personal protective equipment. Wear self-contained breathing apparatus for firefighting if necessary. |
| Further information | : | This material will burn although it is not easily ignited. |
| Fire and explosion protection | : | Treat as a solid that can burn. Avoid generating dust; fine dust dispersed in air in sufficient concentrations, and in the presence of an ignition source is a potential dust explosion hazard. |
| Hazardous decomposition products | : | Normal combustion forms carbon dioxide, water vapor and may produce carbon monoxide, other hydrocarbons and hydrocarbon oxidation products (ketones, aldehydes, organic acids) depending on temperature and air availability. Incomplete combustion can also produce formaldehyde. |

## SECTION 6: Accidental release measures

| | | |
|---|---|---|
| Personal precautions | : | Sweep up to prevent slipping hazard. Avoid breathing dust. Avoid dust formation. |
| Environmental precautions | : | Do not contaminate surface water. Prevent product from entering drains. |
| Methods for cleaning up | : | Clean up promptly by sweeping or vacuum. |
| Additional advice | : | Dust deposits should not be allowed to accumulate on surfaces, as these may form an explosive mixture if they are released into the atmosphere in sufficient concentration. Avoid dispersal of dust in the air (i.e., clearing dust surfaces with compressed air). |

## SECTION 7: Handling and storage

**Handling**

Advice on safe handling : Use good housekeeping for safe handling of the product. Keep out of water sources and sewers.

Spilled pellets and powders may create a slipping hazard.

Electrostatic charge may accumulate and create a hazardous condition when handling this material. To minimize this hazard, bonding and grounding may be necessary, but may not by themselves be sufficient. At elevated temperatures (>350°F, >177°C), polyethylene can release vapors and gases, which are irritating to the mucous membranes of the eyes, mouth, throat, and lungs. These substances may include acetaldehyde, acetone, acetic acid, formic acid, formaldehyde and acrolein. Based on animal data and limited epidemiological evidence, formaldehyde has been listed as a carcinogen. Following all recommendations within this SDS should minimize exposure to thermal processing emissions.

Advice on protection against fire and explosion : Treat as a solid that can burn. Avoid generating dust; fine dust dispersed in air in sufficient concentrations, and in the presence of an ignition source is a potential dust explosion hazard.

**Storage**

Requirements for storage areas and containers : Keep in a dry place. Keep in a well-ventilated place.

Advice on common storage : Do not store together with oxidizing and self-igniting products.

## SECTION 8: Exposure controls/personal protection

**Ingredients with workplace control parameters**

**US**

| Ingredients | Basis | Value | Control parameters | Note |
|---|---|---|---|---|
| Nuisance Dust | OSHA Z-3 | TWA | 15 mg/m3 | Total dust |
| | OSHA Z-3 | TWA | 5 mg/m3 | (respirable dust) |

Control as Particulate Not Otherwise Classified (PNOC). The ACGIH Guideline* for respirable dust is 3.0 mg/m3 and 10.0 mg/m3 for total dust. The OSHA PEL for respirable dust is 5.0 mg/m3 and 15.0 mg/m3 for total dust.
* This value is for inhalable (total) particulate matter containing no asbestos and < 1.0% crystalline silica.

**Engineering measures**

Consider the potential hazards of this material (see Section 2), applicable exposure limits, job activities, and other substances in the work place when designing engineering controls and selecting personal protective equipment. If engineering controls or work practices are not adequate to prevent exposure to harmful levels of this material, the personal protective equipment listed below is recommended. The user should read and understand all instructions and limitations supplied with the equipment since protection is usually provided for a limited time or under certain circumstances.

**Personal protective equipment**

Respiratory protection : No respiratory protection is normally required. If heated material generates vapor or fumes that are not adequately controlled by ventilation, wear an appropriate respirator. Use the following elements for air-purifying respirators: Organic Vapor and Formaldehyde. Use a positive pressure, air-

supplying respirator if there is potential for uncontrolled release, exposure levels are not known, or other circumstances where air-purifying respirators may not provide adequate protection. Dust safety masks are recommended when the dust concentration is excessive.

Eye protection : Use of safety glasses with side shields for solid handling is good industrial practice. If this material is heated, wear chemical goggles or safety glasses with side shields or a face shield. If there is potential for dust, use chemical goggles.

Skin and body protection : At ambient temperatures use of clean and protective clothing is good industrial practice. If the material is heated or molten, wear thermally insulated, heat-resistant gloves that are able to withstand the temperature of the molten product. If this material is heated, wear insulated clothing to prevent skin contact if engineering controls or work practices are not adequate.

## SECTION 9: Physical and chemical properties

### Information on basic physical and chemical properties

**Appearance**

Form : Pellets
Physical state : Solid
Color : Opaque
Odor : Mild to no odor
Odor Threshold : No data available

**Safety data**

Flash point : No data available

Lower explosion limit : Not applicable

Upper explosion limit : Not applicable

Autoignition temperature : No data available

Thermal decomposition : Low molecular weight hydrocarbons, alcohols, aldehydes, acids and ketones can be formed during thermal processing.

Molecular formula : Mixture

pH : Not applicable

Melting point/range : 90 - 140 °C (194 - 284 °F)

Freezing point Not applicable

Initial boiling point and boiling range : Not applicable
Vapor pressure : Not applicable

| | | |
|---|---|---|
| Relative density | : | Not applicable |
| Density | : | 0.91 - 0.97 g/cm3 |
| Water solubility | : | Negligible |
| Partition coefficient: n-octanol/water | : | No data available |
| Solubility in other solvents | : | No data available |
| Viscosity, dynamic | : | Not applicable |
| Viscosity, kinematic | : | Not applicable |
| Relative vapor density | : | Not applicable |
| Evaporation rate | : | Not applicable |

## SECTION 10: Stability and reactivity

| | | |
|---|---|---|
| Reactivity | : | This material is considered non-reactive under normal ambient and anticipated storage and handling conditions of temperature and pressure. |
| Chemical stability | : | This material is considered stable under normal ambient and anticipated storage and handling conditions of temperature and pressure. |

**Possibility of hazardous reactions**

| | | |
|---|---|---|
| Conditions to avoid | : | Avoid prolonged storage at elevated temperature. |
| Materials to avoid | : | Avoid contact with strong oxidizing agents. |
| Thermal decomposition | : | Low molecular weight hydrocarbons, alcohols, aldehydes, acids and ketones can be formed during thermal processing. |
| Hazardous decomposition products | : | Normal combustion forms carbon dioxide, water vapor and may produce carbon monoxide, other hydrocarbons and hydrocarbon oxidation products (ketones, aldehydes, organic acids) depending on temperature and air availability. Incomplete combustion can also produce formaldehyde. |
| Other data | : | No decomposition if stored and applied as directed. |

## SECTION 11: Toxicological information

**Rotational Molding Polyethylene, Pellets or Powder**

| | | |
|---|---|---|
| **Acute oral toxicity** | : | Presumed Not Toxic |

**Rotational Molding Polyethylene, Pellets or Powder**
**Acute inhalation toxicity** : Presumed Not Toxic

**Rotational Molding Polyethylene, Pellets or Powder**
**Acute dermal toxicity** : Presumed Not Toxic

**Rotational Molding Polyethylene, Pellets or Powder**
**Skin irritation** : No skin irritation

**Rotational Molding Polyethylene, Pellets or Powder**
**Eye irritation** : No eye irritation

**Rotational Molding Polyethylene, Pellets or Powder**
**Sensitization** : Did not cause sensitization on laboratory animals.

**Rotational Molding Polyethylene, Pellets or Powder**
**Further information** : This product contains POLYMERIZED OLEFINS. During thermal processing (>350°F, >177°C) polyolefins can release vapors and gases (aldehydes,ketones and organic acids) which are irritating to the mucous membranes of the eyes, mouth, throat, and lungs. Generally these irritant effects are all transitory. However, prolonged exposure to irritating off-gases can lead to pulmonary edema. Formaldehyde (an aldehyde) has been classified as a carcinogen based on animal data and limited epidemiological evidence.

## SECTION 12: Ecological information

**Ecotoxicity effects**

Elimination information (persistence and degradability)

Bioaccumulation : Does not bioaccumulate.

Mobility : The product is insoluble and floats on water.

Biodegradability : This material is not expected to be readily biodegradable.

**Ecotoxicology Assessment**

Additional ecological information : This material is not expected to be harmful to aquatic organisms., Fish or birds may eat pellets which may obstruct their digestive tracts.

## SECTION 13: Disposal considerations

The information in this SDS pertains only to the product as shipped.

Use material for its intended purpose or recycle if possible. This material, if it must be discarded, may meet the criteria of a hazardous waste as defined by US EPA under RCRA (40 CFR 261) or other State and local regulations. Measurement of certain physical properties and analysis for regulated components may be necessary to make a correct determination. If this material is classified as a hazardous waste, federal law requires disposal at a licensed hazardous waste disposal facility.

## SECTION 14: Transport information

**The shipping descriptions shown here are for bulk shipments only, and may not apply to shipments in non-bulk packages (see regulatory definition).**

Consult the appropriate domestic or international mode-specific and quantity-specific Dangerous Goods Regulations for additional shipping description requirements (e.g., technical name or names, etc.) Therefore, the information shown here, may not always agree with the bill of lading shipping description for the material. Flashpoints for the material may vary slightly between the SDS and the bill of lading.

**US DOT (UNITED STATES DEPARTMENT OF TRANSPORTATION)**
NOT REGULATED AS A HAZARDOUS MATERIAL OR DANGEROUS GOODS FOR TRANSPORTATION BY THIS AGENCY.

**IMO / IMDG (INTERNATIONAL MARITIME DANGEROUS GOODS)**
NOT REGULATED AS A HAZARDOUS MATERIAL OR DANGEROUS GOODS FOR TRANSPORTATION BY THIS AGENCY.

**IATA (INTERNATIONAL AIR TRANSPORT ASSOCIATION)**
NOT REGULATED AS A HAZARDOUS MATERIAL OR DANGEROUS GOODS FOR TRANSPORTATION BY THIS AGENCY.

**ADR (AGREEMENT ON DANGEROUS GOODS BY ROAD (EUROPE))**
NOT REGULATED AS A HAZARDOUS MATERIAL OR DANGEROUS GOODS FOR TRANSPORTATION BY THIS AGENCY.

**RID (REGULATIONS CONCERNING THE INTERNATIONAL TRANSPORT OF DANGEROUS GOODS (EUROPE))**
NOT REGULATED AS A HAZARDOUS MATERIAL OR DANGEROUS GOODS FOR TRANSPORTATION BY THIS AGENCY.

**ADN (EUROPEAN AGREEMENT CONCERNING THE INTERNATIONAL CARRIAGE OF DANGEROUS GOODS BY INLAND WATERWAYS)**
NOT REGULATED AS A HAZARDOUS MATERIAL OR DANGEROUS GOODS FOR TRANSPORTATION BY THIS AGENCY.

**Transport in bulk according to Annex II of MARPOL 73/78 and the IBC Code**

## SECTION 15: Regulatory information

### National legislation

| | | |
|---|---|---|
| **SARA 311/312 Hazards** | : | No SARA Hazards |
| CERCLA Reportable Quantity | : | This material does not contain any components with a CERCLA RQ. |
| SARA 302 Reportable Quantity | : | This material does not contain any components with a SARA 302 RQ. |
| SARA 302 Threshold Planning Quantity | : | No chemicals in this material are subject to the reporting requirements of SARA Title III, Section 302. |
| SARA 304 Reportable Quantity | : | This material does not contain any components with a section 304 EHS RQ. |
| SARA 313 Ingredients | : | This material does not contain any chemical components with known CAS numbers that exceed the threshold (De Minimis) reporting levels established by SARA Title III, Section 313. |

### Clean Air Act

| | | |
|---|---|---|
| Ozone-Depletion Potential | : | This product neither contains, nor was manufactured with a Class I or Class II ODS as defined by the U.S. Clean Air Act Section 602 (40 CFR 82, Subpt. A, App.A + B). |

This product does not contain any hazardous air pollutants (HAP), as defined by the U.S. Clean Air Act Section 12 (40 CFR 61).

This product does not contain any chemicals listed under the U.S. Clean Air Act Section 112(r) for Accidental Release Prevention (40 CFR 68.130, Subpart F).

This product does not contain any chemicals listed under the U.S. Clean Air Act Section 111 SOCMI Intermediate or Final VOC's (40 CFR 60.489).

### US State Regulations

Pennsylvania Right To Know

: No components are subject to the Pennsylvania Right to Know Act.

New Jersey Right To Know
: No components are subject to the New Jersey Right to Know Act.

California Prop. 65 Ingredients : This product does not contain any chemicals known to the State of California to cause cancer, birth, or any other reproductive defects.

**Notification status**

| | | |
|---|---|---|
| Europe REACH | : | On the inventory, or in compliance with the inventory |
| United States of America TSCA | : | On TSCA Inventory |
| Canada DSL | : | All components of this product are on the Canadian DSL. |
| Australia AICS | : | On the inventory, or in compliance with the inventory |
| New Zealand NZIoC | : | On the inventory, or in compliance with the inventory |
| Japan ENCS | : | On the inventory, or in compliance with the inventory |
| Korea KECI | : | On the inventory, or in compliance with the inventory |
| Philippines PICCS | : | On the inventory, or in compliance with the inventory |
| China IECSC | : | On the inventory, or in compliance with the inventory |

## SECTION 16: Other information

**NFPA Classification** : Health Hazard: 0
Fire Hazard: 1
Reactivity Hazard: 0

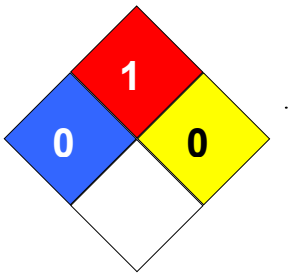


**Further information**

Legacy SDS Number : CPC00464

Significant changes since the last version are highlighted in the margin. This version replaces all previous versions.

The information in this SDS pertains only to the product as shipped.

The information provided in this Safety Data Sheet is correct to the best of our knowledge, information and belief at the date of its publication. The information given is designed only as a guidance for safe handling, use, processing, storage, transportation, disposal and release and is not to be considered a warranty or quality specification. The information relates only to the specific material designated and may not be valid for such material used in combination with any other materials or in any process, unless specified in the text.

Key or legend to abbreviations and acronyms used in the safety data sheet

| | | | |
|---|---|---|---|
| ACGIH | American Conference of Government Industrial Hygienists | LD50 | Lethal Dose 50% |
| AICS | Australia, Inventory of Chemical Substances | LOAEL | Lowest Observed Adverse Effect Level |
| DSL | Canada, Domestic Substances List | NFPA | National Fire Protection Agency |
| NDSL | Canada, Non-Domestic Substances List | NIOSH | National Institute for Occupational Safety & Health |
| CNS | Central Nervous System | NTP | National Toxicology Program |
| CAS | Chemical Abstract Service | NZIoC | New Zealand Inventory of Chemicals |
| EC50 | Effective Concentration | NOAEL | No Observable Adverse Effect Level |
| EC50 | Effective Concentration 50% | NOEC | No Observed Effect Concentration |
| EGEST | EOSCA Generic Exposure Scenario Tool | OSHA | Occupational Safety & Health Administration |
| EOSCA | European Oilfield Specialty Chemicals Association | PEL | Permissible Exposure Limit |
| EINECS | European Inventory of Existing Chemical Substances | PICCS | Philippines Inventory of Commercial Chemical Substances |
| MAK | Germany Maximum Concentration Values | PRNT | Presumed Not Toxic |
| GHS | Globally Harmonized System | RCRA | Resource Conservation Recovery Act |
| >= | Greater Than or Equal To | STEL | Short-term Exposure Limit |
| IC50 | Inhibition Concentration 50% | SARA | Superfund Amendments and Reauthorization Act. |
| IARC | International Agency for Research on Cancer | TLV | Threshold Limit Value |
| IECSC | Inventory of Existing Chemical Substances in China | TWA | Time Weighted Average |
| ENCS | Japan, Inventory of Existing and New Chemical Substances | TSCA | Toxic Substance Control Act |
| KECI | Korea, Existing Chemical Inventory | UVCB | Unknown or Variable Composition, Complex Reaction Products, and Biological Materials |
| <= | Less Than or Equal To | WHMIS | Workplace Hazardous Materials Information System |
| LC50 | Lethal Concentration 50% | | |

**DeepSea Power & Light**
4033 Ruffin Road
San Diego, CA 92123-181
USA

www.deepsea.com
sales@deepsea.com
T: 1-858-576-1261
F: 1-858-576-0219



Rev 04/26/2022